HARDEE

BY EVH MFG CO



OPERATOR'S AND MAINTENANCE MANUAL

Panther 60

DANGER

Read this manual and the manual for your tractor carefully to acquaint yourself with both machines before operating!

4895 RED BLUFF RD LORIS, SC 29569 (843) 756-2555

www.hardeebyevh.com evhmfg@hardeebyevh.com

MODEL NUMBER _____

SERIAL NUMBER _____

DATE OF PURCHASE _____

	Customer Pre-Operation Check List	Reference
☐	Read, understand and follow the general safety rules listed in this manual.	Page 2
☐	Check gearbox lube level.	Page 4
☐	Check all blades and blade holder for sharpness and condition.	Page 4
☐	Check skids for wear and tightness.	Page 5
☐	Check decals for position and legibility	Page 5

Table of Contents

Section 1 INTRODUCTION 1
- Owner's Responsibility 1
- Purpose of this Manual 1
- Safety-Alert Symbol 1
- Signal Words 1
- Customer Assistance 1

Section 2 SAFETY INFORMATION 2
- General Safety Rules 2
- Safety Decals 3

Section 3 PREPARATION FOR USE 4
- **Check** 4
  - Gearbox Lube Level 4
  - Blade and Blade Holder Condition 4
  - Blade Attaching Hardware 4
  - Skid Condition 5
  - Decal Condition 5
- **Attachment** 5
  - Three-Point Hitch (Lift Type Mower) 5
  - Driveshaft 5
- **Adjustment** 6
  - Slip Clutch 6
  - Mowing Height 7
  - Leveling Lift Type Mower 7
  - Adjusting Mowing Height 7

Section 4 OPERATION INSTRUCTION 8
- **Cautions** 8
  - Lights, SMV Emblems 8
  - Low Speed 8
- **Normal Procedures** 8
  - Traveling (Lift Type Mower) 8
- **Mowing** 8
  - Reverse Operation 8
  - Slopes 9
  - Sharp Turns 9

Section 5 LUBRICATION 10
- **U-Joints** 10
- **Driveshaft** 10
- **Tail Wheel Bearings and Pivots** 10

Section 6 MAINTENANCE 11
- **Blades** 11
  - Check Blade Condition 11
  - Remove Blades 11
  - Remove Blade Holder 11
  - Replace Blade Holder 11
  - Replace Blades 11
  - Gearbox Lube Level 12
- **Gearbox** 12
  - Gearbox Seals and Gasket 12
  - Input Shaft Seal and Cover Gasket 12
  - Output Shaft Seal 12
  - Gearbox Mounting Hardware 12
- **Slip Clutch** 12
- **Safety Shields** 12
- **Tail Wheel (Lift Type)** 13
  - Replace Wheel 13
  - Replace Pivot 13
- **Wheel Bearings (Pull Type)** 13

Section 7 REFERENCE 14-21
- **Bolt Torque** 22
- **Checking Bolt Torque** 22
- **Torque Specifications Coarse Thread** 22
- **Torque Specifications Fine Thread & Head Markings** 23

Warranty 24

© Copyright 2004 All Rights Reserved

Hardee by EVH provides this publication "as is" without warranty of any kind, either expressed or implied. Every precaution has been taken in the design of this manual, however EVH assumes no responsibility for errors or omissions. Neither is any liability assumed for damages resulting from the use of the information contained herein. EVH reserves the right to revise and improve this product at any time. The illustrations in this manual are not intended for the safe and proper assembly or disassembly of this product, but for parts ordering reference only.

Owner's Responsibility

The manufacturer has no control over the ultimate use of the mower and therefore assumes no responsibility or liability for damage or injury resulting from the use of this machine.

The upkeep of the mower is the responsibility of the user. This upkeep includes all shielding, guards, and safety decals (OSHA Regulation 1928.57). You can obtain replacement parts from any authorized Hardee dealer.

Read this Operator's Manual before operating the mower. Failure to do so could result in serious injury or death to the operator or to others. Remember that most accidents occur due to neglect or carelessness. The operator is responsible for inspecting and making repairs as may be necessary. Cleaning after each use and storage under a shelter will extend the life of the mower.

Purpose of This Manual

This manual provides information on safety, operation, adjustments, troubleshooting and maintenance of your new mower. Please read and follow all the recommendations to help ensure that you get many years of service from your new Hardee mower.

If you need additional copies of this manual, please contact your local Hardee dealer or download a copy from our website at www.hardeebyevh.com.

Safety-Alert Symbol

This symbol is the safety alert symbol. It appears throughout this manual to call your attention to instructions involving your personal safety and the safety of others. Failure to follow these instructions can result in injury or death.

Signal Words

Safety signal words are words that call attention to the safety sign and designate a degree or level of hazard seriousness. The signal words used throughout this manual are DANGER, WARNING and CAUTION. Please read and follow all safety messages that have these signal words shown for your protection.

DANGER

Indicates an imminently hazardous situation which, if not avoided, will result in death or serious injury.

WARNING

Indicates a potentially hazardous situation which, if not avoided, could result in death or serious injury.

CAUTION

Indicates a potentially hazardous situation which, if not avoided, may result in minor or moderate injury.

Customer Assistance

The Hardee by EVH sales team would like you to be satisfied with your new MOWER. If for some reason you have any questions about the information in this manual or have a problem with your multi-spindle rotary mower, please discuss the problem or question with the management of your local dealership. If further assistance is required, please contact:

HARDEE by EVH Manufacturing Company, LLC
Sales Department
4895 Red Bluff Road
Loris, SC 29569
843-756-2555
sales@hardeebyevh.com

General Safety Rules

This section of your manual will address the safe operation of your new mower. We, at Hardee, strive to produce a machine that is both a quality product and safe to operate. Please take the time to read, understand and follow the safety rules listed below and throughout this manual.

Your safety also depends on you becoming familiar with the basic operation of your new mower. You can find complete instructions for this mower in the Operation Instruction section of this manual. We believe that using your mower safely; in a safe environment will give you great results!

DANGER
If your tractor has an open cab, then it MUST be equipped with operator protective equipment in the form of shielding from thrown objects to operate this equipment safely.

DANGER
Mowers have the inherent ability to throw debris considerable distances when the blades are allowed to strike foreign objects. The operator must use caution or serious injury may result. Be sure by-standers are at a safe distance at all times when the mower is in use.

WARNING
ALWAYS keep your tractor level. Be careful to keep ample distance between the rear tire and the top of the ditch bank to avoid a cave-in of the bank.

WARNING
Failure to keep the tractor level may result in loss of traction, tipping, rollover, property damage, personal injury or death.

WARNING
- *NEVER allow an UNQUALIFIED OR UNDERAGE person to operate the mower.*
- *NEVER allow any person under the influence of drugs or alcohol, or who is otherwise impaired, to operate the mower.*

DANGER
DO NOT look under the mower deck or attempt to remove objects or branches from under the mower deck while the tractor is running. Serious injury, loss of limb or death may result.

DANGER
DO NOT reach under the mower deck at any time. Cutting blades may cause serious injury, loss of limb or disfigurement.

WARNING
All shielding, guards and safety decals must be in place at all times while the mower is in operation. Consult OSHA Regulation 1928.57 for further details.

WARNING
- *NEVER operate the mower in an area where objects can be thrown by the mower. Clear areas to be mowed of all foreign objects before mowing.*
- *NEVER allow passengers to ride on the mower or the tractor while the mower or any other implement is operating.*
- *NEVER dismount the tractor from the rear.*
- *NEVER allow HORSEPLAY in the vicinity of the tractor while the mower is operating.*

WARNING
NEVER allow the mower to impact rock piles, piles of gravel, steel guardrails or concrete abutments. Contact with these objects could cause blade failure. Serious machine damage, property damage or bodily injury may occur. Check the area for these items BEFORE mowing.

DANGER
NEVER attempt to use the mower to remove brush larger than 3 inches in diameter.

DANGER
- *ALWAYS disengage the PTO, set parking brake, turn off the tractor engine, remove key and wait for all rotary motion to stop BEFORE dismounting the tractor.*
- *ALWAYS dismount the tractor FROM THE SIDE.*
- *ALWAYS keep blade holder and bolts tight.*
- *ALWAYS wear safety goggles when operating the mower.*

Safety Decals

Your Hardee mower ships with all safety decals in place. They are located in areas on the mower that are potentially hazardous. Please locate, read and follow the information you find on these decals.

By law, you must replace any safety decals that are damaged or missing. You can order replacement decals from any local Hardee dealer. Ask for part number listed next to decal.

To apply the replacement decals:

- Clean the surface to place the new decal.
- Peel the decal away from the paper backing.
- Press firmly onto the clean surface.
- Squeeze out any air pockets using a straight edge.



P/N 11001



P/N 11004





P/N 11005



P/N 11006



P/N 11002

CHECK

Danger

NEVER attempt any checks, repairs or adjustments with the tractor engine running or the power take-off engaged. Adjustment of rotating parts while the tractor engine is running can result in serious personal injury or death if the PTO accidentally engages.

Gearbox Lube Level

The gearbox is filled with lubricant at the factory. If a shaft seal or cover gasket is damaged, the lubricant will leak. After periods of heavy use (at least every 10 hours of operation), or if lubricant leaks are observed, check the lubricant level.

- Position mower on a level surface.
- Visual check and look for leaks in shaft and open plate cover and check for oil in blade pan.
- Remove gearbox lubricant level inspection plug and check lubricant level. Lubricant should be at or near the hole.
- If lubricant is low, remove gearbox Fill/Pressure Relief Plug (P/N 15664) and add SAE 85-140 lubricant until lubricant starts to flow from level inspection hole. DO NOT OVERFILL. Overfilling will induce leakage and cause damage to seals and gaskets.
- Replace Lubricant Level Plug and Fill/Pressure Relief Plug (P/N 15664).

Note: DO NOT OPERATE THE MOWER WHEN LUBRICANT LEVEL IS LOW. Replace damaged seals or gasket and add lubricant to the correct level. DO NOT OVERFILL.

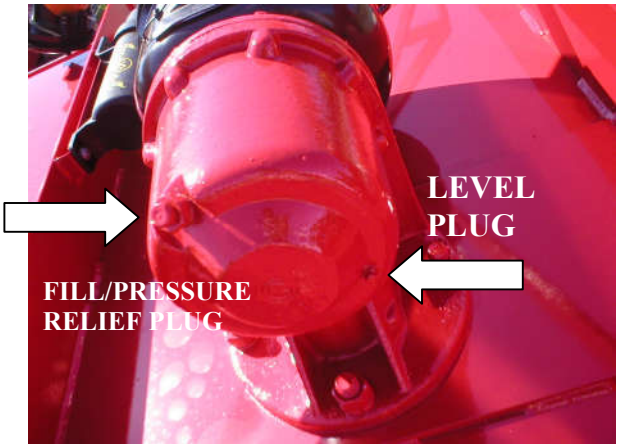

Checking Gearbox Lubricant Level

Blade and Blade Holder Condition

- Lift and support mower by an approved means.

Danger

The mowers weigh BETWEEN 400 and 490 pounds and will cause severe injury or death if one falls on the operator during maintenance. Support the mower with a supporting device having a capacity for at least 1 ½ times the weight of the mower (e.g. – 420 pound mower = 630 pound lifting device capacity).

- Check mower blades for sharpness and condition. Replace worn mower blades in pairs only. Sharpen dull mower blades in pairs only.

Note: It is a good practice to weigh blades after sharpening to ensure balance.

Danger

Excessively worn or dull mower blades, or the replacement or sharpening of only one mower blade, can cause excessive mower vibration, resulting in damage to the gearbox and structural damage to the mower. Excessive vibration can cause rotating parts to break and fly off the mower, causing serious injury or death to the operator or bystanders.

- Lock blade holder so it will not turn.
- Remove blade holder shaft cotter pin.
- Check blade holder nut for tightness. Tighten as required.

Danger

A loose blade holder shaft can cause the shaft to break, causing the holder to fly out, damaging the mower and causing serious personal injury or death to the operator or bystanders. Ensure that the nut is tight on the shaft and the cotter pin is securely in place.

- Replace blade holder shaft cotter pin.
- Remove supporting means and lower mower.

Blade Attaching Hardware

- Rotate blade bolt access cover (on top of mower deck in front of the gearbox) from covering over the access hole.
- Turn blade holder to position blade bolt under access hole.
- Tighten blade bolt.
- Turn blade holder to position second blade bolt under the access hole.
- Tighten blade bolt.
- Rotate blade bolt access cover over access hole.

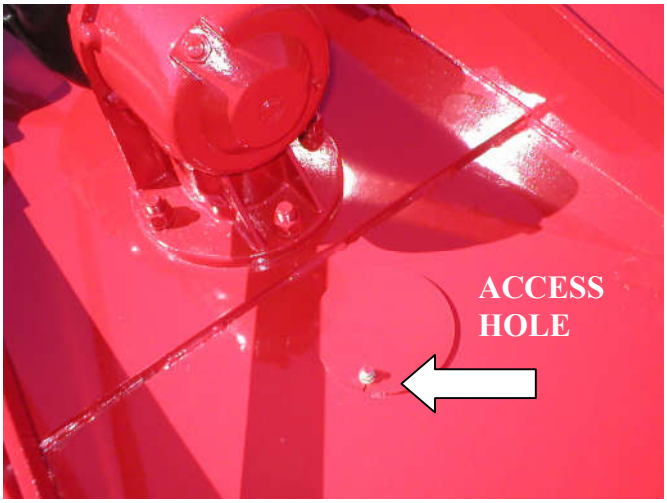

Checking Blade Bolts



Positioning Hitch Upper Arm

Skid Condition

- Check skids for wear and tightness.
- Replace skids less than 1/16” thick.

Decal Condition

Check all decals for position and legibility before attaching the mower to the tractor. Replace all decals that have been removed, damaged or destroyed. See the Safety Section for decal locations.

ATTACHMENT

Three-Point Hitch (Lift Type Mower)

- Position tractor in front of mower so that the tractor hitch is in line with mower hitch.
- Connect tractor lower hitch arms to mower hitch points and lock pins in place.

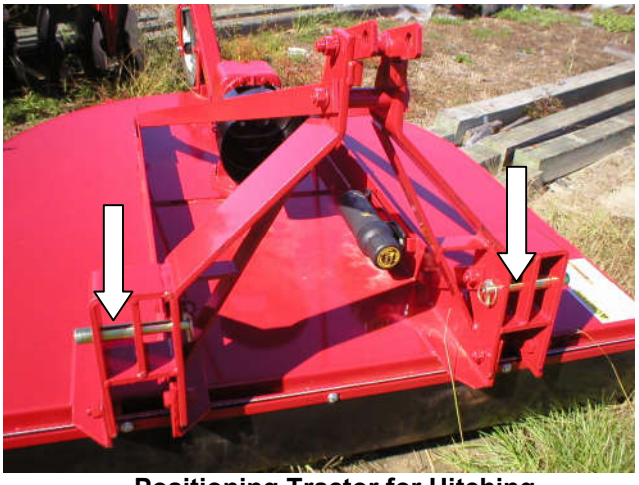

Positioning Tractor for Hitching

- Connect tractor top hitch link to floating linkage on mower hitch. Adjust linkage to a 45° angle.

Driveshaft

Danger

NEVER attach the mower to a 1000-RPM PTO unless mower is rated for 1000-RPM. Operating the mower over 540-RPM could result in severe damage to the mower, and in parts flying off the mower resulting in severe personal injury or death to the operator or bystanders.

- Lift tractor PTO guard.
- Pull U-joint guard back along driveshaft.
- Press driveshaft yoke plunger in and slip driveshaft U-joint yoke onto splined PTO shaft. Check that plunger returns to locked position.
- Position U-joint guard over driveshaft U-joint.
- Lower Tractor PTO guard.

ADJUSTMENT

Slip Clutch

Mowers are equipped with a slip clutch on the driveshaft to protect the tractor and mower drivetrain parts from sudden overloads. When properly adjusted, the clutch will slip to relieve excess loads and automatically reset itself without interrupting the mower operation.

To compensate for clutch plate face wear and to maintain capacity during continuous use, the slip clutch must be adjusted periodically. Adjust the slip clutch at the beginning of each use, and when the mower has been idle for extended periods.

⚠ *Danger*

NEVER attempt any repairs or adjustments with the tractor engine running or the power take-off engaged. Adjustment of rotating parts while tractor engine is running can result in serious personal injury or death if the PTO accidentally engages.

- Remove slip clutch safety shield by removing the retaining clip and sliding shield back along the driveshaft.
- Loosen slip clutch adjusting nuts.
- Check clutch plate assembly. Free plates by lightly tapping on flat edges of drive plates if required.

Note: Slip clutches have a tendency to seize if left idle for extended periods.

⚠ *Danger*

Ensure that all bystanders are clear of the mower before the tractor engine is started. Objects thrown by the mower can cause severe personal injury or death.

- Start tractor engine and engage power take-off at low rpm for one or two seconds to remove any rust or other foreign material between the slip clutch plates.
- Disengage PTO, turn off tractor, set brake and remove key. Ensure that all rotary motion has stopped before dismounting the tractor.
- Remove clutch safety shield.
- Tighten clutch adjusting nuts alternately and evenly 1/2 turn at a time until springs have compressed to between 1 1/8” to 1” in length.
- Scribe a chalk line across clutch drive plate and driven plate to mark their position relative to one another.



Adjusting Slip Clutch

Note: The drive plate is on the U-joint side of the slip clutch. The driven plate is on the gearbox side.

Note: If plates still can be rotated by hand when springs are compressed to the limit, new plates must be installed. Refer to parts breakdown for correct part number.

- Replace clutch safety shield after adjustments are complete.
- Operate rotary mower for three or four minutes under normal load.
- Disengage PTO, turn off tractor, set brake and remove key. Ensure that all rotary motion has stopped before dismounting tractor.
- Remove safety shield.
- Observe chalk lines on clutch plates. If clutch is not slipping under normal load, chalk marks will still be aligned. Clutch is correctly adjusted. If clutch is slipping, chalk lines will not be aligned.

Note: If chalk is not available, the following method may be used to check for clutch slippage.

- Carefully check if clutch is overheating by holding hand near clutch. If slipping has occurred, allow clutch to cool before adjusting.

⚠ *Warning*

DO NOT touch the slip clutch with bare hands immediately after operation. Severe skin burns and component damage may result if the clutch is adjusted while hot.

- Repeat above procedure until heating and slippage are eliminated.
- Replace clutch safety shield after adjustments are complete.

Mowing Height

Danger

The mower must be operated on a level plane at all times to minimize the risk of objects being thrown out from under the mower. Objects thrown by the mower can cause severe personal injury or death.

Safety chain shielding is highly recommended to minimize the danger of objects being thrown out from under the mower. Safety chain shielding is available from Hardee By EVH Mfg. and authorized Hardee dealers and distributors. Safety belting comes standard on all mowers.

Leveling Lift Type Mower

Hook mower to tractor, transport mower to level area if not at one already. Lower the mower to about six (6) inches above the ground. If not level adjust third arm of tractor until front and rear of mower are equal heights above the ground.

Danger

To minimize the possibility of personal or mechanical injury from objects being thrown from under the mower, it must be operated level at all times.

Adjusting Mowing Height (Lift and Pull Type)

Cutting height is achieved by using the ratchet jack or by the optional hydraulic cylinder. If ratchet jack is used, jack cutter down until it is about two (2) inches above the ground. This is the recommended cutting height. In loose or moist soil additional clearance may be needed.

If hydraulic cylinder is used, lower the mower to two (2) or three (3) inches above the ground. With the hydraulic cylinder two (2) spacers are supplied, in two different sizes. Measure the space between cylinder body and the stop. Used spacer that comes closest to fitting and this will lock your mower at the working mower height. For more height add spacers.

Danger

Mowing with mower to high above the ground will cause debris to be thrown from under the mower, causing serious personal injury to operator or bystanders. Make sure mower is at recommended height at all times when mower is being operated.

CAUTIONS

Danger

Incorrect operation of the mower may produce hazardous situations that can lead to serious injury or death. The mower has been designed to minimize the risks of accidents, but there is no substitute for a careful operator.

Note: See SAFETY PRECAUTIONS in the introduction section for a list of safety related cautions to be observed while operating mower.

Lights, SMV Emblems

If operating along public roads, warning lights or slow moving vehicle emblems should be used unless prohibited by law. Check local and state codes.

Low Speed

Slow the tractor down when approaching trees, fences, ditches or other obstacles. The flywheel effect of the blade rotation will move some tractors forward after the main drive clutch has been disengaged. To stop forward movement, apply tractor brakes and throttle the engine back to allow the engine to slow the rotor before disengaging the PTO or drive clutch.

NORMAL PROCEDURES

Traveling

Raise the mower to its maximum height when traveling. Additional ground clearance can be obtained by shortening the tractor hitch center arm. NEVER engage PTO while mower is in traveling position WITHOUT a cutting load.



Mower in Traveling Position

Warning

Transporting the mower at maximum height changes the center of gravity of the tractor. Do not travel at high rates of speed with the mower in travelling position, especially over rough or bumpy terrain. Tractor instability during high-speed travel can cause a rollover, resulting in serious personal injury or death.



Mower in Operating Position

Mowing

- Watch for holes, rocks, roots or other hidden hazards.
- Keep away from drop-offs.
- Do not cut near the edge of a gully or bank.
- Slow down before turning.
- Engage PTO as directed by tractor manufacturer.

Reverse Operation

Do not operate the mower in reverse unless absolutely essential.

Caution

DO NOT operate mower in reverse unless absolutely essential and is allowed by the tractor manufacturer. Reverse PTO operation may damage tractor drivetrain. Material maybe thrown out through the front of the mower during reverse operation, posing a hazard to the operator and bystanders. Cut in reverse only if optional safety chain shielding is installed on the mower.

- Look behind mower before putting tractor in reverse gear.
- Back tractor at lowest speed available
- Watch back of mower at all times while backing.

Slopes

Cut down, not across, steep slopes. Avoid sudden starts and stops. Avoid mowing up steep slopes. Slow down before changing direction on steep slopes.

Sharp Turns

When turning with the mower, ensure that the rear tractor wheels do not strike any part of the mower. Extremely short turns should be avoided to prevent excessive U-joint wear.

LUBRICATION

Visually inspect the mower at least once a week. Lubricate parts with good lithium EP grease at the intervals specified. If heavy, long-duration operation is expected, lubricate more frequently. Wipe off excess grease after lubricating.

Interval	Lift Type	Pull Type
4 hours	U-Joints	U-Joints
10 hours	Driveshaft Joint Tail Wheel Bearings Tail Wheel Arm	Driveshaft Joint Tail Wheel Arm
Yearly		Ratchet Jack Wheel Bearings



Lubricating Universal Joints

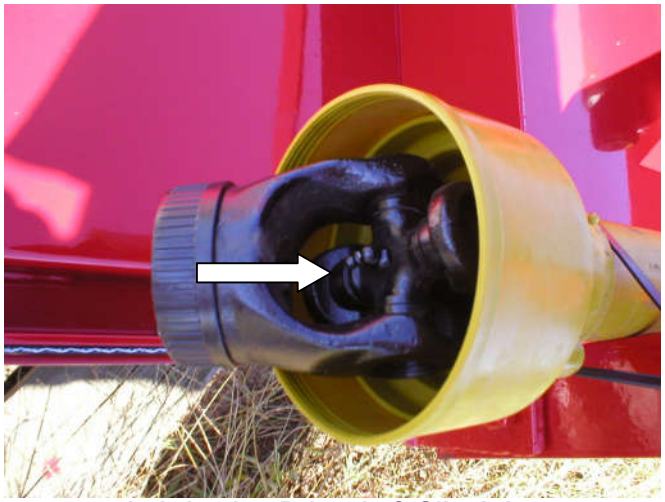

Lubricating Driveshaft Slip Joints

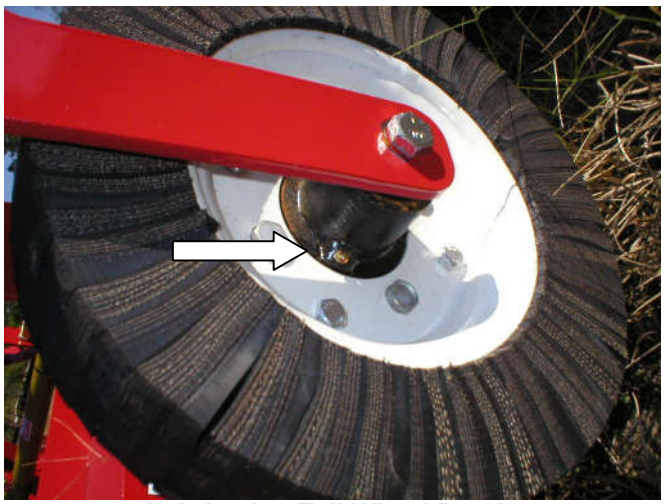

Lubricating Tail Wheel Bearings

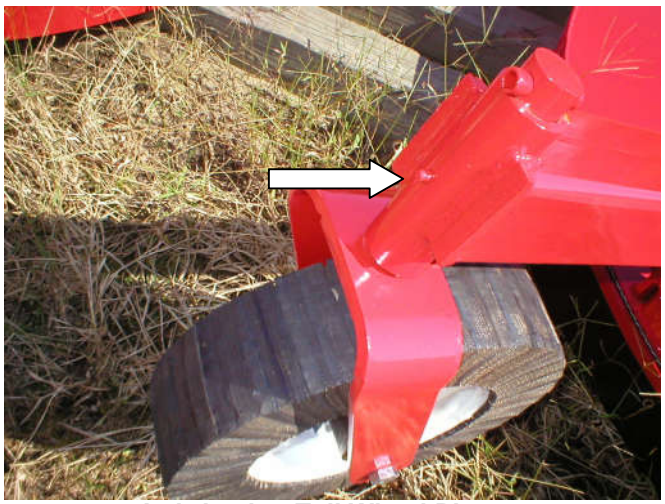

Lubricating Tail Wheel Pivot

MAINTENANCE

Danger

NEVER attempt any checks, repairs or adjustments with the tractor engine running or the power take-off engaged. Adjustment of rotating parts while tractor engine is running can result in serious personal injury or death if the PTO accidentally engages.

BLADES

Check Blade Condition

Danger

Excessively worn or dull mower blades, or replacement or sharpening of only one mower blade can cause excessive mower vibration, damage to the gearbox and structural damage to the mower. Excessive vibration can cause rotating parts to break and fly off the mower, resulting in serious injury or death to the operator or bystanders.

- Lift and support mower by approved means.

Danger

Lift and support mower by approved means only. The mowers weigh BETWEEN 400 and 490 pounds and will cause severe injury or death if it falls on the operator during maintenance. Support the mower with a supporting device having a capacity for at least 1 ½ times the weight or the mower (e.g. – 420 pound mower = 630 pound lifting device capacity).

- Check mower blades for sharpness and condition. Replace worn mower blades in pairs only.

Remove Blades

- Disconnect driveshaft from gearbox.
- Rotate blade bolt access cover (on top of the mower deck in front of the gearbox) from over the access hole.
- Turn blade holder to position blade bolt under access hole.
- Remove blade bolt and blade.

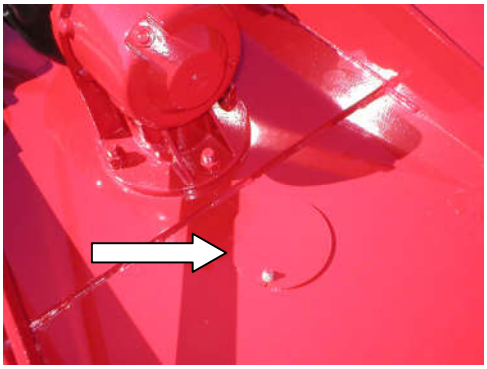

Removing Blade Bolt

Remove Blade Holder

- Lock gearbox shaft by an approved means.
- Remove cotter pin from shaft.
- Back off set bolt.

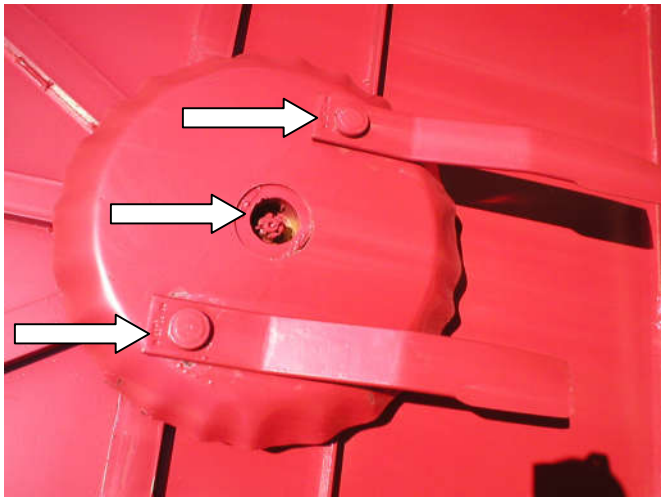

Removing Blade Holder Nut

Danger

The blade holder is heavy and will cause serious personal injury or death if it falls on the operator. Support the holder by an approved means before proceeding to the next step.

- Remove set bolt and nut.
- Remove slotted nut, washer and blade holder.

Replace Blade Holder

- Lift blade holder onto gearbox shaft.
- Install set bolt and nut.
- Install washer and slotted nut. Tighten the nut.
- Install cotter pin on gearbox shaft.

Danger

A loose blade holder could cause the gearbox shaft to break under load, causing the holder to fly out from under the mower. This could cause damage to the mower and serious personal injury or death to the operator or bystanders. Ensure that the slotted nut is tight against the holder and that the cotter pin is in good condition.

Replace Blades

- Rotate blade bolt access cover away from access hole in mower deck.
- Position holder so that a blade-mounting hole is directly beneath access hole.
- Position blade on holder.
- Install and tighten blade bolt.

- Turn blade holder to position second blade-mounting hole under access hole.
- Install and tighten blade bolt.
- Rotate blade bolt access cover over access hole.
- Install driveshaft.
- Remove supporting means and lower mower.

Gearbox Lube Level

After periods of heavy use (at least every 10 hours of operation), or after repairing the gearbox, or if lubricant leaks are observed, check gearbox lubricant levels.

Caution

DO NOT operate the mower if lubricant level is low. Replace damaged seals or gasket and add lubricant to the correct level. DO NOT OVERFILL.

- Position mower on a level surface.
- Visually check and look for leaks in shaft and open plate cover and check for oil in blade pan.
- Remove gearbox lubricant level plug and check lubricant level. Lubricant should be at or near bottom of hole.
- If lubricant is low, remove gearbox Fill/Pressure Relief Plug (P/N 15664) and add SAE 85-140 lubricant until lubricant starts to flow from level inspection hole. DO NOT OVERFILL. Overfilling will induce leakage and cause damage to seals and gaskets.
- Replace Lubricant Level Plug and Fill/Pressure Relief Plug (P/N 15664).

Caution

*FILL/PRESSURE RELIEF PLUG (P/N 15664) Must not be **CLOGGED** OR **RESTRICTED**. Must be able to vent gearbox.*

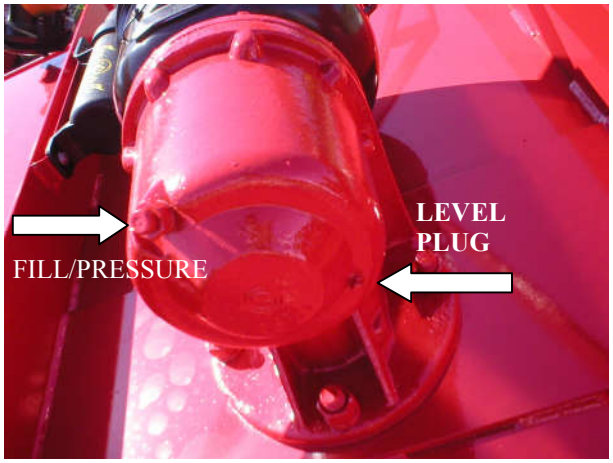

Checking Gearbox Lubricant Level

GEARBOX

Gearbox Seals and Gaskets

Check the gearbox for leaks around the seals and gasket daily when the mower is in use. If a shaft seal or gasket is damaged, lubricant will leak out of the gearbox.

- Disconnect driveshaft from gearbox.
- Remove lubricant drain plug and allow all of the lubricant to drain.

Input Shaft Seal and Cover Gasket

- Remove gearbox cover.
- Replace shaft seal and cover gasket.
- Replace gearbox cover.
- Replace drain plug and refill with lubricant.

Output Shaft Seal

- Remove blade holder.
- Remove gearbox from top deck. Drain lubricant.
- Replace shaft seal.
- Install gearbox on top deck.
- Replace drain plug and refill with lubricant.
- Install blade holder.

Gearbox Mounting Hardware

Check that the gearbox is tight on the mower top deck each day the mower is in use. If it becomes loose, tighten the mounting bolts.

SLIP CLUTCH

Danger

NEVER attempt any repairs or adjustments with the tractor engine running or the power take-off engaged. Adjustment of rotating parts while tractor engine is still running can result in serious personal injury or death if the PTO accidentally engages.

See SLIP CLUTCH adjustment procedure in Section 1.

SAFETY SHIELDS

Check safety shields before each use. Check to see that all attaching hardware is tight. Replace any length of chain that has missing or damaged links. Replace rubber belting if damaged. If mower has a haygate, after cutting hay, replace gate, making sure all nuts and bolts are in place and tight. To keep haygate bolts in good condition when operating without gate, replace nuts and bolts and tighten.

TAIL WHEEL (LIFT TYPE)

Replace Wheel

Caution

Adequately support the mower and the wheel before removing the axle. Both the wheel and the mower are heavy and could cause damage to the mower or serious injury if dropped.

- Remove wheel axle nuts and axle.
- Remove wheel.
- Position wheel in pivot yoke.
- Install wheel axle and nuts.

Replace Pivot

- Raise and support mower using approved means. Support mower high enough so that pivot shaft can be removed from tail wheel pivot bracket.

Caution

Adequately support the mower and the tail wheel assembly before removing the bolt. Both the tail wheel and the mower are heavy and could cause damage to the mower or serious injury if dropped.

- Remove collar bolt, nut and collar on top of pivot bracket.



Removing Tail Wheel Pivot Collar Bolt

- Remove pivot from pivot bracket.
- Install replacement pivot in bracket.
- Install collar, collar bolt, and nut on pivot on top of pivot bracket.
- Lubricate with lithium EP grease (See LUBRICATION, Section 3).

WHEEL BEARINGS (PULL TYPE)

- Remove dust cap from wheel hub.
- Clean out old grease from dust cap.
- Pack dust cap with clean wheel bearing grease.
- Install dust cap.

REFERENCE

ITEM NO.	PART NUMBER	QTY REQD.	NOMENCLATURE OR DESCRIPTION
1	24401	1	Deck Weldment
2	24381	1	Tailwheel Fork & Arm Assembly
3	24325	1	Blade Holder Sub Assembly
4	11174	1	Driveshaft
5	10102	1	5/8" X 7" Hex Bolt
6	10330	1	15" Solid Tire & Rim
7	24266	2	Strut
8	20035	1	Floating Linkage Weldment
9	24215	1	Floating Linkage Spacer
10	24386	2	A–Frame
11	11469	1	Retaining Ring (comes w/gearbox)
12	11171	1	1.47:1 Splineless Gearbox
13	10097	1	Hex Bolt (5/8" x 4 1/2" gr.5)
14	20036	1	Spindle Shaft Tube
15	10184	4	1/2" Lockwasher
16	10091	4	Hex Bolt (5/8" X 1 1/2" Gr.5 Plt)
17	10096	1	Hex Bolt (5/8" X 4" Gr.5 Plated)
18	10099	1	Hex Bolt (5/8" X 5–1/2" Gr.5 Plated)
19	11728	1	Fab Hub w/Grafoil Bushings
20	10166	12	Lock Nut (5/8" Plated)
21	10173	1	Castle Nut (comes with Gearbox)
22	10893	2	Tie Strap (18" Long)
23	10185	8	Lock Washer (5/8" Plated)
24	11779	2	Logo & Model # Decal for Panther 60
25	10246	1	Cotter Pin (3/16" X 1–1/4" Plated)
26	10307	2	Category 1 Hitch Pin
27	11727	1	Serial Number Plate
28	10339	2	Rivets for Serial Number Plate
29	10335	.75	Hardee Red Paint
30	10336	0.19	Gear Oil
31	10269	1	Hex Head Cap Screw (1/2"–13 UNC X 3 3/4" Grade 2 Zinc Plated)

DWG. NO. 24400			REV. B
REV	CHANGE	BY	DATE	ECN
IR	INITIAL RELEASE	T.R.M.	6/6/01	---
A	Added Manual Holder & Reflectors	JOC	7/28/04	0980
B	Changed From 20242	JOC	7/28/04	1025

	32	10176	5	Lock Nut (1/2" Plated)
	33	10110	4	Hex Bolt (3/4" X 1 1/2" Gr.5 Plated)
	34	10168	4	Lock Nut (3/4" Plated)
	35	11499	1	PATHFINDER DECAL SHEET
B	36	20030	2	Tailwheel Adjusting Bracket
	37	11010	2	Hardee Logo Decal
	38	15852	2	Decal – Red Reflectors
	39	15854	1	Manual Holder
	40	10002	2	Hex Bolt (1/4" X 1" Gr.5 Plated)
	41	15860	2	U–Nut 1/4"–20
	42	10200	2	Flat Washer (1/4" Plated)
	43	11850	1	Web Site Decal

All Dimensions in Inches Unless Otherwise Specified
Dimensions in [ ] are in Millimeters

Tolerances Unless Otherwise Specified
Fractional Dimensions ±1/16" Angular Dimensions ±1°
Decimal Dim. to Limits Shown All holes to be $^{+0}_{-1/32}$

DRAWN BY	T.R.M.	6/6/01
CHECKED BY		
MATERIAL	R.M.N.	
MANUFACTURED BY: HARDEE MFG. CO., LLC		

EVH Manufacturing Co.
LORIS S.C.

APPLICATION	OLD PART #
PANTHER 60	

DESCRIPTION: PANTHER 60 COMPLETE

DO NOT SCALE	A DWG SIZE	DWG. NO. 24400
		SHEET 1 OF 5

REFERENCE

DWG. NO. 24400			REV. B	
REV	CHANGE	BY	DATE	ECN
IR	INITIAL RELEASE	T.R.M.	6/6/01	---
A	Added Manual Holder & Reflectors	JOC	7/28/04	0980
B	Changed From 20242	JOC	7/28/04	1025

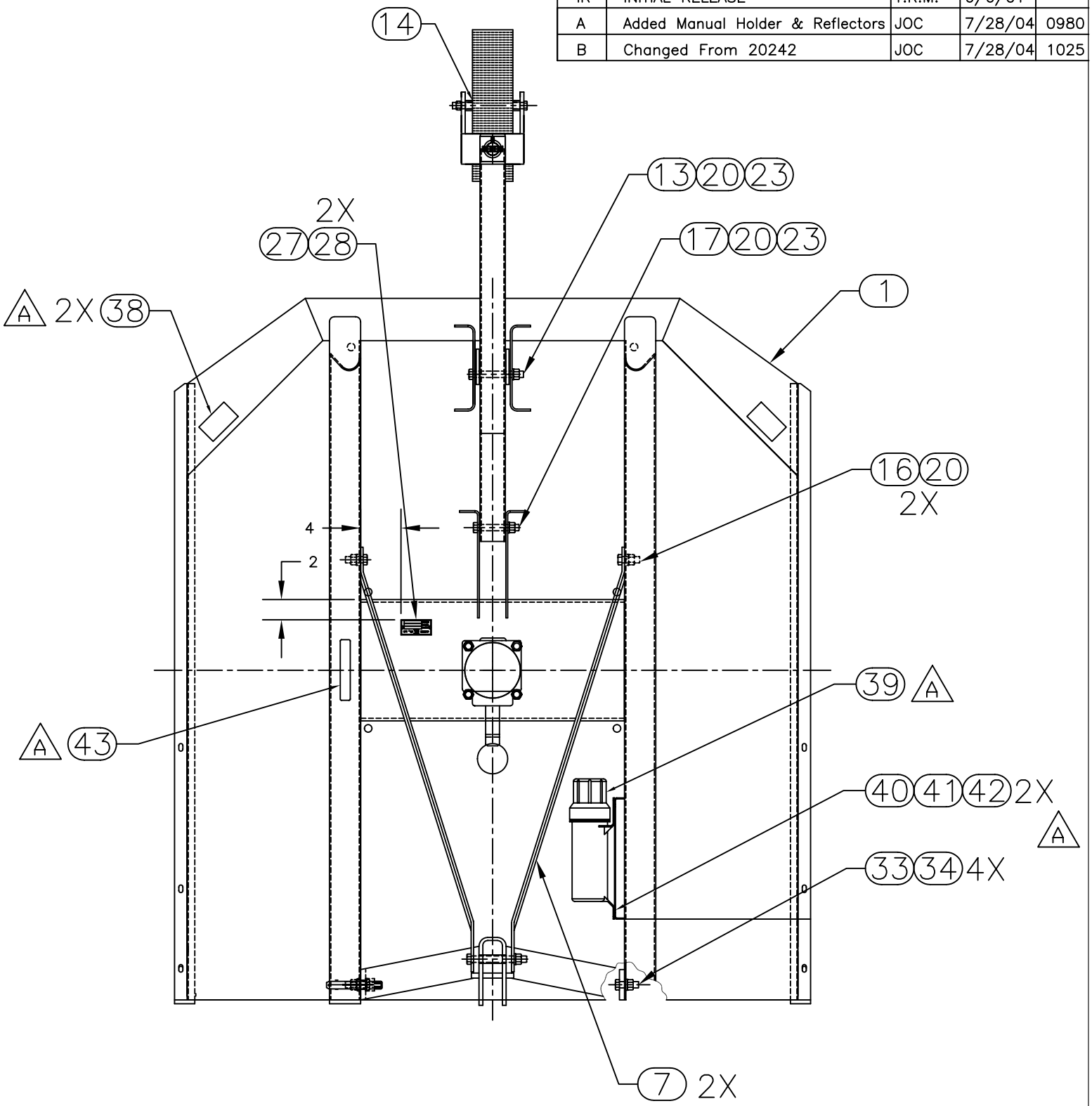

TOP VIEW

DRAWN BY	T.R.M.	6/6/01	EVH Manufacturing Co. LORIS S.C.
CHECKED BY			
MATERIAL	R.M.N.		APPLICATION: PANTHER 60 / OLD PART #
MANUFACTURED BY: HARDEE MFG. CO., LLC			DESCRIPTION: PANTHER 60 COMPLETE
			DO NOT SCALE / A DWG SIZE / DWG. NO. 24400 / SHEET 2 OF 5

All Dimensions in Inches Unless Otherwise Specified
Dimensions in [ ] are in Millimeters

Tolerances Unless Otherwise Specified
Fractional Dimensions ±1/16" Angular Dimensions ±1°
Decimal Dim. to Limits Shown All holes to be $^{+0}_{-1/32}$

DWG. NO. 24400			REV. B	
REV	CHANGE	BY	DATE	ECN
IR	INITIAL RELEASE	T.R.M.	6/6/01	---
A	Added Manual Holder & Reflectors	JOC	7/28/04	0980
B	Changed From 20242	JOC	7/28/04	1025

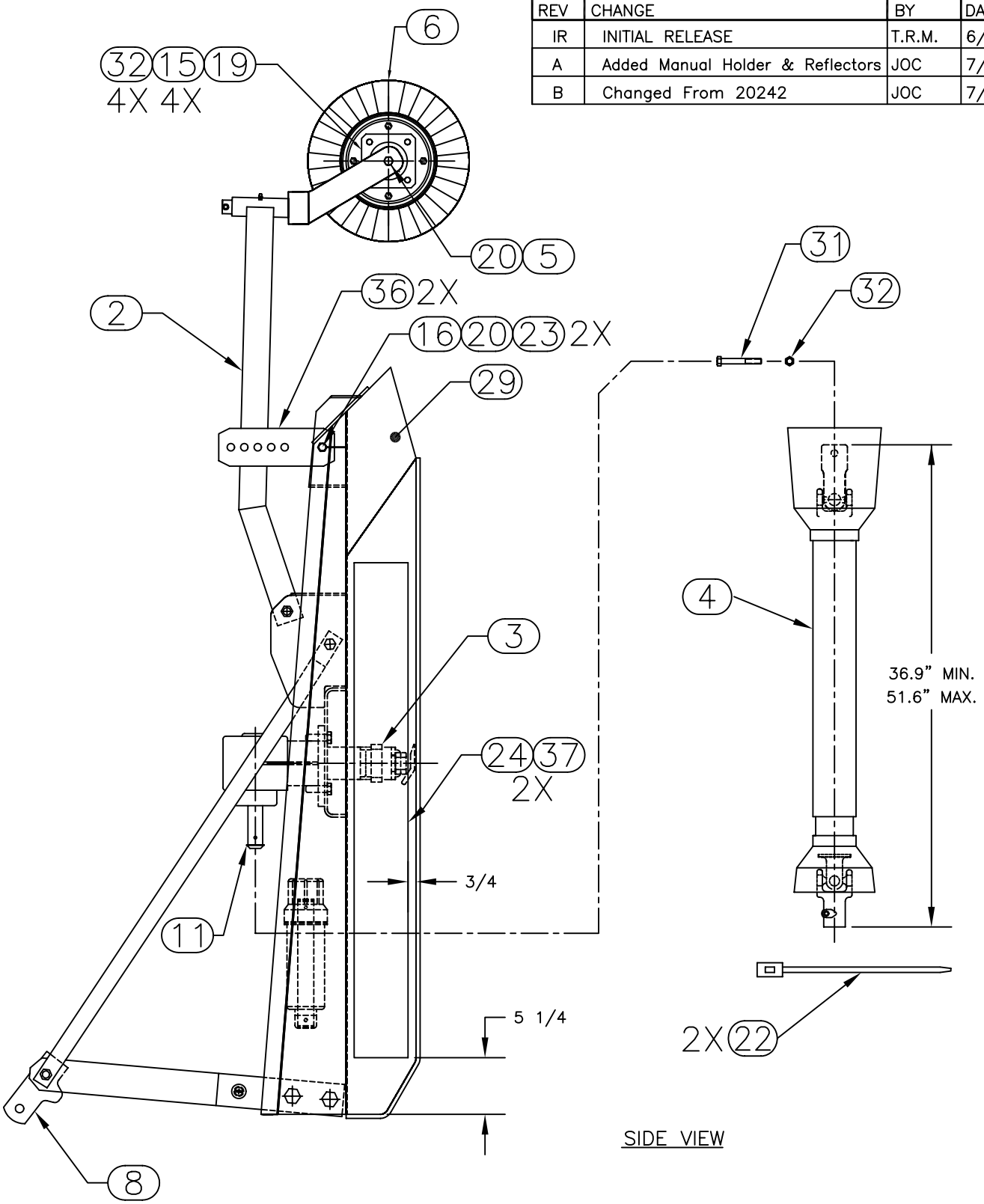

DRAWN BY	T.R.M.	6/6/01
CHECKED BY		
MATERIAL	R.M.N.	
MANUFACTURED BY: HARDEE MFG. CO., LLC		

EVH Manufacturing Co.
LORIS S.C.

APPLICATION	OLD PART #
PANTHER 60	

DESCRIPTION: PANTHER 60 COMPLETE

DO NOT SCALE	A DWG SIZE	DWG. NO. 24400
		SHEET 3 OF 5

All Dimensions in Inches Unless Otherwise Specified
Dimensions in [ ] are in Millimeters

Tolerances Unless Otherwise Specified
Fractional Dimensions ±1/16" Angular Dimensions ±1°
Decimal Dim. to Limits Shown All holes to be $^{+0}_{-1/32}$

REFERENCE

DWG. NO. 24400			REV. B	
REV	CHANGE	BY	DATE	ECN
IR	INITIAL RELEASE	T.R.M.	6/6/01	---
A	Added Manual Holder & Reflectors	JOC	7/28/04	0980
B	Changed From 20242	JOC	7/28/04	1025

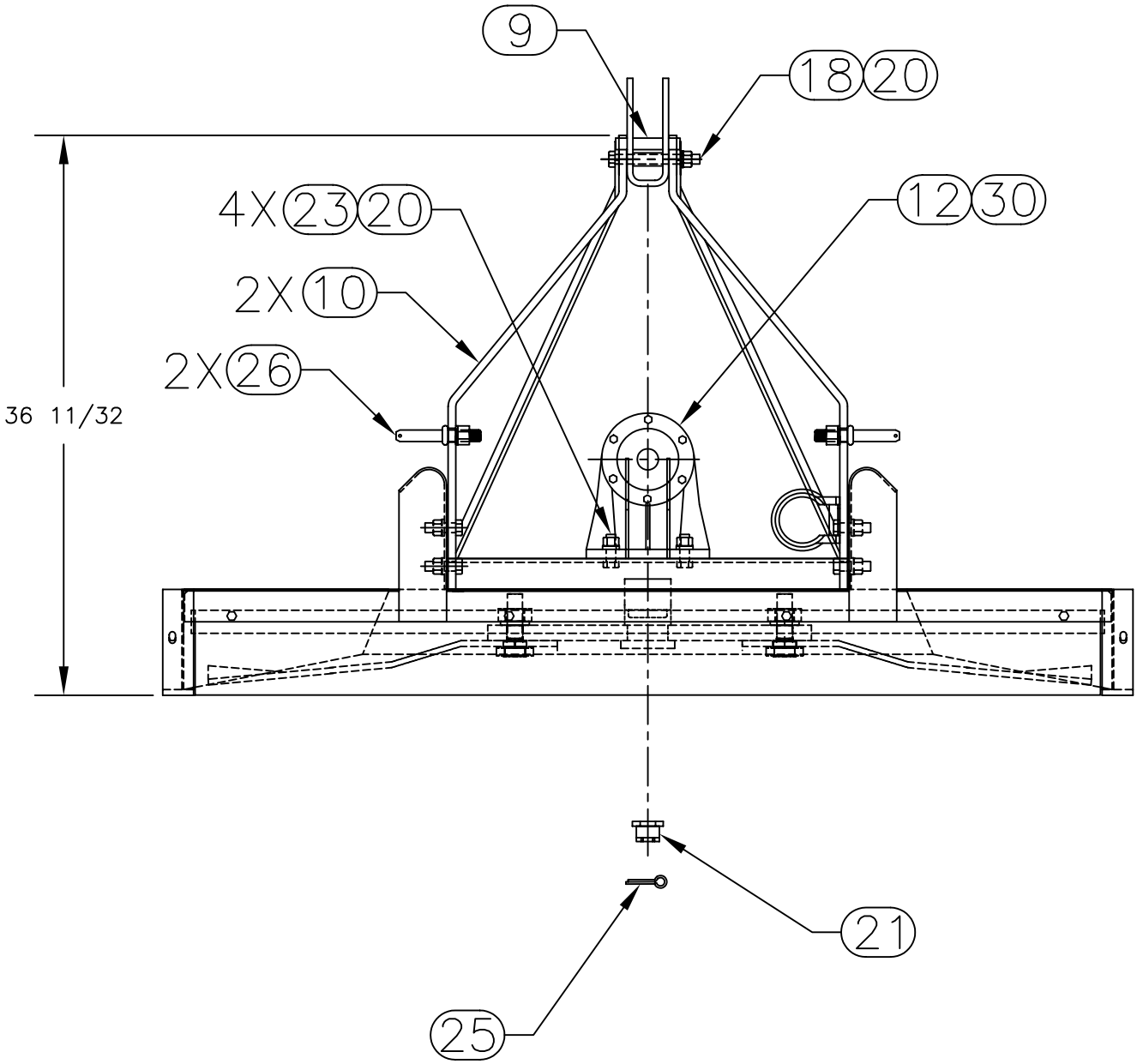

FRONT VIEW

All Dimensions in Inches Unless Otherwise Specified
Dimensions in [ ] are in Millimeters

Tolerances Unless Otherwise Specified
Fractional Dimensions ±1/16" Angular Dimensions ±1°
Decimal Dim. to Limits Shown All holes to be $^{+0}_{-1/32}$

DRAWN BY	T.R.M.	6/6/01
CHECKED BY		
MATERIAL	R.M.N.	
MANUFACTURED BY: HARDEE MFG. CO., LLC		

EVH Manufacturing Co.
LORIS S.C.

APPLICATION	OLD PART #
PANTHER 60	

DESCRIPTION: PANTHER 60 COMPLETE

DO NOT SCALE	A DWG SIZE	DWG. NO. SHEET 4 OF 5 24400

NOTES:

1. ALL DECALS MAKE UP ITEM 35.

DWG. NO. 24400			REV. B	
REV	CHANGE	BY	DATE	ECN
IR	INITIAL RELEASE	T.R.M.	6/6/01	---
A	Added Manual Holder & Reflectors	JOC	7/28/04	0980
B	Changed From 20242	JOC	7/28/04	1025

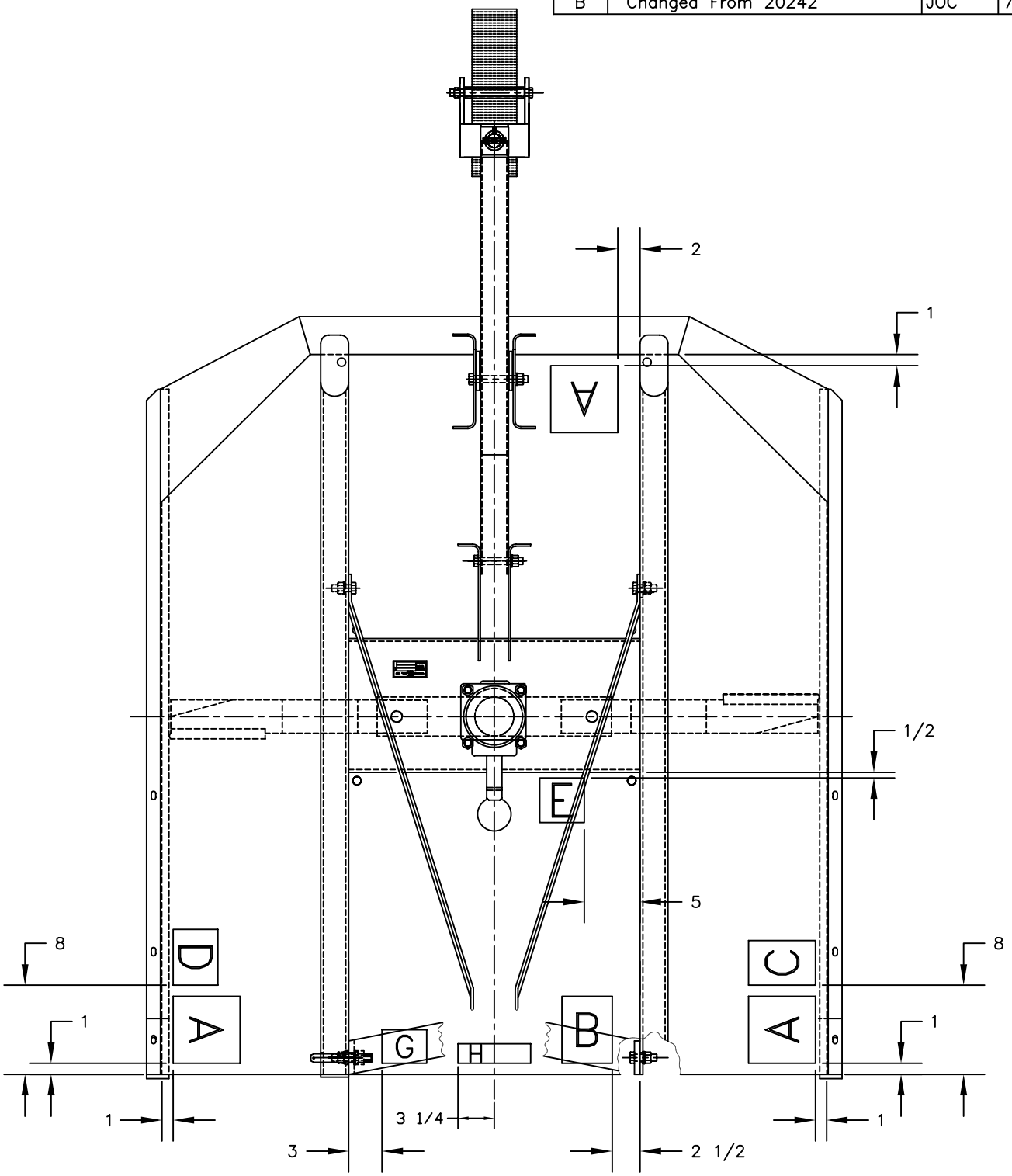

DRAWN BY	T.R.M.	6/6/01
CHECKED BY		
MATERIAL	R.M.N.	
MANUFACTURED BY: HARDEE MFG. CO., LLC		

EVH Manufacturing Co.
LORIS S.C.

APPLICATION	OLD PART #
PANTHER 60	

DESCRIPTION: PANTHER 60

DO NOT SCALE	A DWG SIZE	DWG. NO. SHEET 5 OF 5 24400

All Dimensions in Inches Unless Otherwise Specified
Dimensions in [ ] are in Millimeters

Tolerances Unless Otherwise Specified
Fractional Dimensions ±1/16" Angular Dimensions ±1°
Decimal Dim. to Limits Shown All holes to be $^{+0}_{-1/32}$

REFERENCE

ITEM NO.	PART NUMBER	QTY REQD.	NOMENCLATURE OR DESCRIPTION
1	24311	1	BLADE HOLDER WELDMENT
2	24059	2	BLADE BOLT W/LOCKNUT △D
3	10308	2	BLADE △D

DWG. NO. 24325			REV. D	
REV	CHANGE	BY	DATE	ECN
IR	INITIAL RELEASE	W.E.S.	7/16/98	---
A	CHANGE HEIGHTH DIMENSION	M.J.T.	11/3/98	0523
B	CHANGE BLADE BOLT	M.J.T.	12/2/98	0534
C	CHANGE BLADE BOLT	T.R.M.	11/30/99	0674
D	REVISED B.O.M. LIST -REVISED CO. HEADER	T.A.S.	2/4/2011	1403

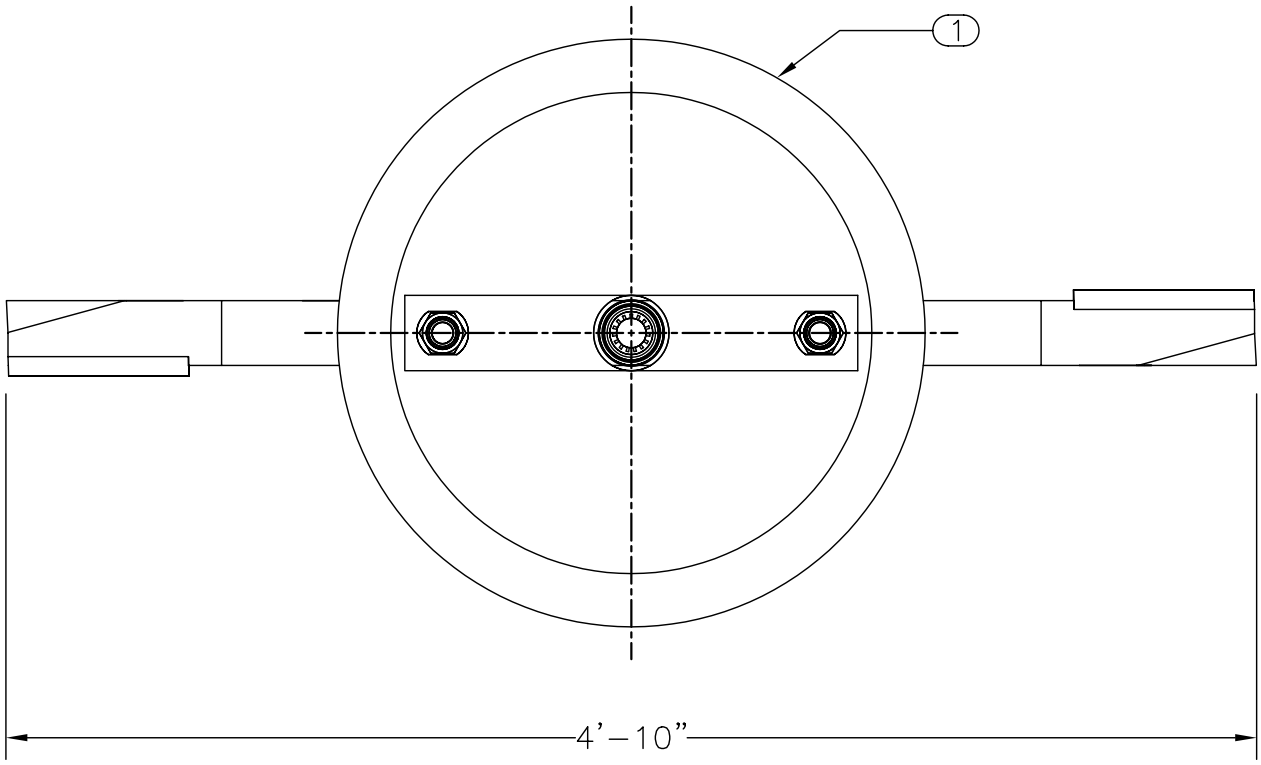

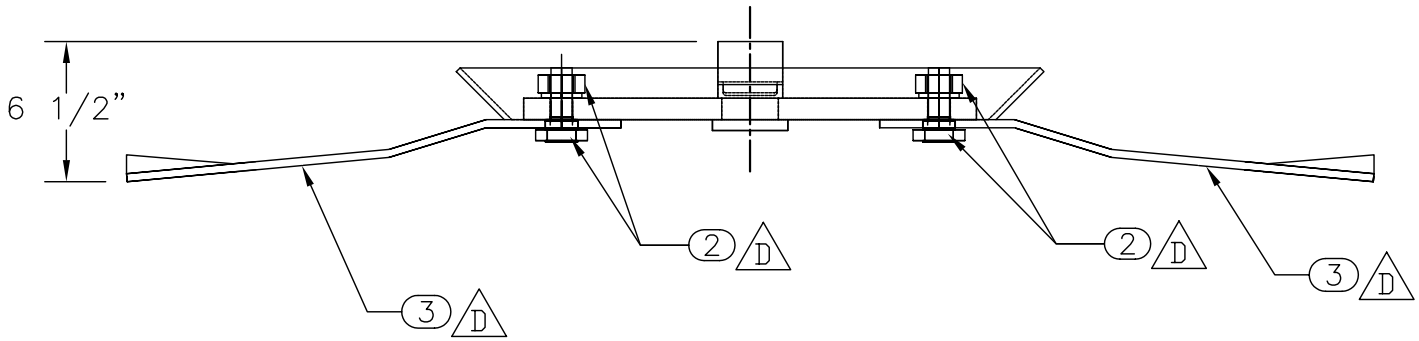

All Dimensions in Inches Unless Otherwise Specified
Dimensions in [ ] are in Millimeters

Tolerances Unless Otherwise Specified
Fractional Dimensions ±1/16" Angular Dimensions ±1°
Decimal Dim. to Limits Shown All holes to be $^{+0}_{-1/32}$

DRAWN BY	J.CREEL	7/16/98
CHECKED BY		
MATERIAL	R.M.N.	
MANUFACTURED BY: WILLIAMS AG GROUP		

HARDEE
EVH MFG CO.
LORIS S.C.

APLLICATION	OLD PART #
P-60	

DESCRIPTION: P-60 BLADE HOLDER SUB ASSEMBLY

DO NOT SCALE	A DWG SIZE	DWG. NO. 24325

11171 Gearbox

(40 H.P. Gearbox 1:1.47 Ratio)

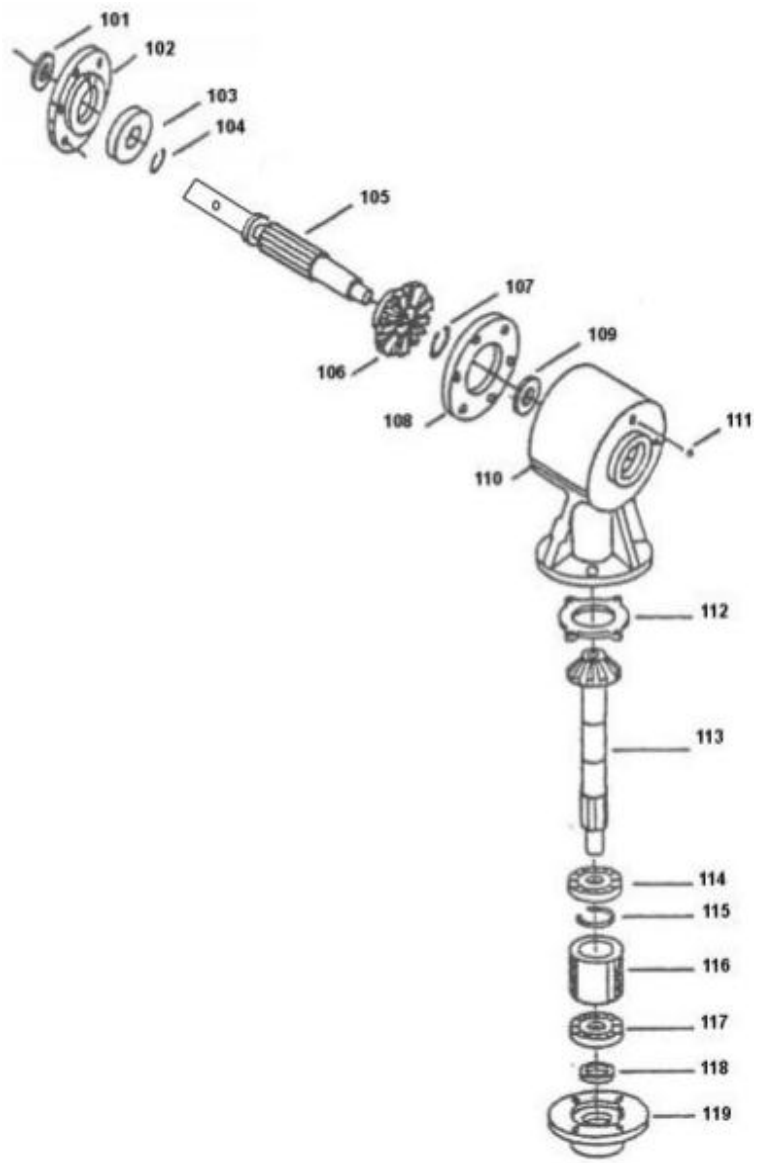

Key #	Part No.	Part Description	Key #	Part No.	Part Description
101	15688	Input seal	111	15664	Pressure relief plug
102	15689	Face plate	112	15753	Gasket
103	15750	Ball bearing	113	15754	Output shaft w/gear
104	15690	Retaining ring	114	15750	Ball bearing
105	15475	Input shaft	115	15695	Retaining ring
106	15751	Input gear	116	15696	Spacer
107	15695	Retaining ring	117	15750	Ball bearing
108	15691	Shim .004	118	15755	Output seal
109	15692	Ball bearing	119	15697	Bottom cap
110	15752	Housing			

11174 Driveshaft

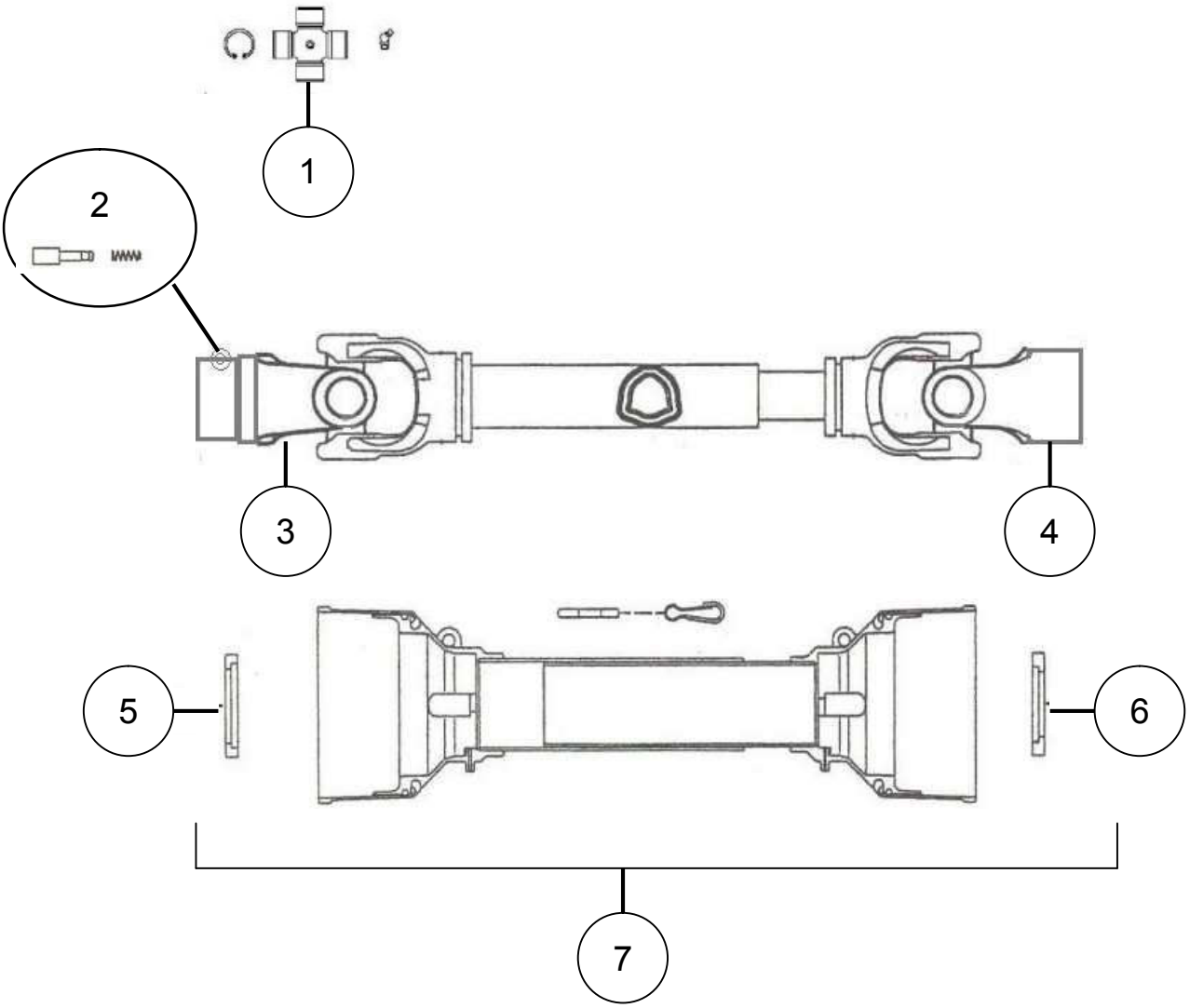

Key #	Part No.	Description	Qty.
1	15112	Cross Kit (Series 4)	2
2	15579	Pin Kit	1
3	11436	Yoke	1
4	15111	Yoke	1
5	11552	O Bearing 4	1
6	11551	I Bearing 4	1
7	11743	Shield Kit	1

Bolt Torque

Checking Bolt Torque

The tables shown below give correct torque values for various bolts and capscrews. Tighten all bolts to the torque specified in the chart unless otherwise noted. Check tightness of bolts periodically, using bolt torque chart as a guide. Replace hardware with the same strength bolt. Torque figures indicated are valid for non-greased or non-oiled threads and heads unless otherwise specified. Therefore, do not grease or oil bolts or cap screws unless otherwise specified in this manual. When using locking elements, increase torque values by 5%.

NOTE: Bolt Torques shown are maximum allowable values for ultimate safe working strength or external load-carrying capacity. The bolt torque are not applicable in cases where bolts are used as a pin-like device, holding together two or more movable objects and keeping them from spreading apart. – "Clamping Torque" Being dependent upon the application of the bolt. -

Torque value for bolts and cap screws are identified by their head markings.
See Page 23

Torque Specifications for Coarse Threads

Diameter "A"	Bolt Torque Coarse Thread					
	SAE-2		SAE-5		SAE-8	
	LB-FT	N.m	LB-FT	N.m	LB-FT	N.m
1/4" - 20	6	8	9	12	12	17
5/16" - 18	10	13	19	25	27	36
3/8" - 16	20	27	33	45	45	63
7/16" - 14	30	41	53	72	75	100
1/2" - 13	45	61	80	110	115	155
9/16" - 12	70	95	115	155	165	220
5/8" - 11	95	128	160	215	220	305
3/4" - 10	165	225	290	390	400	540
7/8" - 9	170	230	420	570	650	880
1" - 8	225	345	630	850	970	1320
1 1/8" - 7	354	478	794	1072	1287	1737
1 1/4" - 7	500	675	1120	1512	1875	2531
1 3/8" - 6	655	884	1470	1985	2382	3216
1 1/2" - 6	870	1175	1950	2632	3161	4267

See page 23 for Torque Specifications for Fine Threads and Head Markings

Torque Specifications for Fine Threads

Diameter "A"	Bolt Torque Fine Thread					
	SAE-2		SAE-5		SAE-8	
	LB-FT	N.m	LB-FT	N.m	LB-FT	N.m
1/4" - 28	6	8	10	14	14	19
5/16" - 24	12	16	19	26	27	36
3/8" - 24	22	31	35	47	49	66
7/16" - 20	36	49	55	74	78	105
1/2" - 20	55	74	85	115	120	162
9/16" - 18	80	108	122	165	172	232
5/8" - 18	110	148	170	230	240	324
3/4" - 16	200	270	297	400	420	567
7/8" -14	180	243	474	640	668	402
1" - 12	274	370	705	952	995	1343
1" -14	280	378	721	973	1019	1376
1 1/8" - 12	397	536	890	1201	1444	1950
1 1/4" - 12	553	747	1241	1675	2012	2716
1 3/8" - 12	746	1007	1672	2257	2712	3661
1 1/2" - 12	979	1322	2194	2962	3557	4802

Head Markings

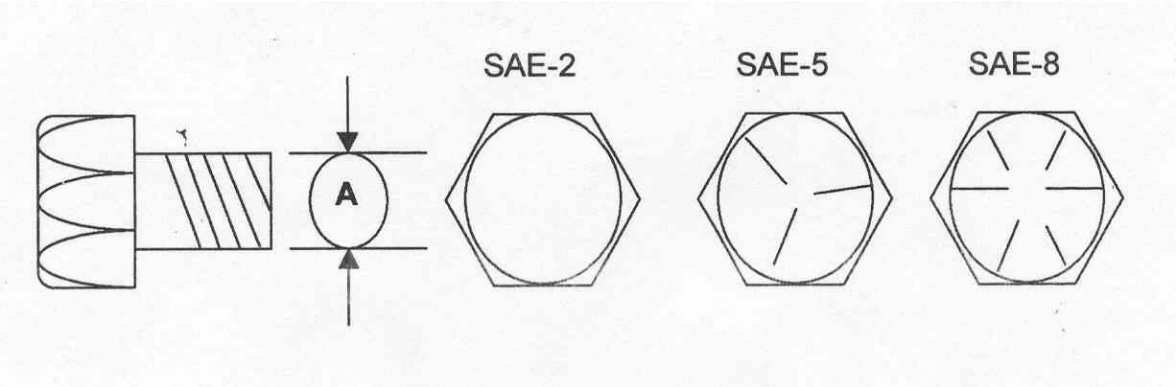

Hardee by EVH Manufacturing Co., LLC Limited Warranty

Hardee by EVH Manufacturing Co., LLC warrants its **Equipment*** for one year to the **original** non-commercial, non-governmental, or non-municipal purchaser. For the **original** commercial, industrial, or municipal purchaser, the goods are warranted for 90 days to be free from defects in material or workmanship.

Special OMNI Gearbox Warranty:
OMNI Gearboxes are warranted for a total of:

3 years to the original non-commercial user
1 year to the original commercial user

This limited warranty does not apply to any part of the goods which have been subjected to improper or abnormal use, negligence, alteration, modification, accident, or damage due to lack of maintenance, wrong oil or lubricants, or which has served its normal life.

The Warranty Card **must** be filled out and returned within **30 days** of purchase. **No** warranty will be allowed without a properly completed and returned warranty card.

"Our obligation under this warranty shall be limited to repair or replacement of any part or parts of this implement, which in our judgement, shows evidence of such defect, and provided further, that said parts shall be removed and returned by the owner at the owner's expense to Hardee by EVH Manufacturing Co., LLC, Loris, SC, through an authorized dealer, transportation prepaid, free and clear of liens or encumbrances."

This warranty shall not include normal wear items.

Changes or alterations to the implement made without the **written** authorization of the manufacturer will render this warranty void.

This warranty does not obligate this company to bear any labor costs in replacement of defective parts.

Hardee by EVH Manufacturing Co., LLC reserves the right to make changes or improvements in its equipment at any time, with the express understanding that such changes or improvements do not impose any obligation of the company to install such changes or improvements on implements previously manufactured.

IMPLIED WARRANTIES: You may have some implied warranties. For example, you may have an implied warranty of merchantability (that the unit is reasonably fit for the general purpose for which it was sold) or an implied warranty of fitness for a particular purpose (that the unit is suitable for your special purposes). Special purposes must be specifically disclosed to Hardee by EVH Manufacturing Co., LLC and not merely to the dealer before your purchase. Hardee by EVH Manufacturing Co., LLC itself must approve, in writing, that the special purpose is warrantable.

These implied warranties do not apply at all if you use your equipment for business or commercial use.

***See separate Hydraulic Mower Limited Warranty for Hydraulics**



HARDEE

BY EVH MFG CO

EVH MANUFACTURING COMPANY, LLC
4895 RED BLUFF ROAD LORIS, SC 29569
PHONE: 843-756-2555 OR 1-888-990-2555
WWW.HARDEEBYEVH.COM EVHMFG@HARDEEBYEVH.COM