MANUAL P/N 24544

HARDEE

BY EVH MFG CO

OPERATOR'S AND MAINTENANCE MANUAL

WITH PARTS LISTING

Long Reach Cutter
Model: HR2360

FOR SERIAL #s STARTING WITH 010934
ENDING WITH 13053

RELEASED 07/07/14

DANGER
Read this manual and the manual for your tractor carefully to acquaint yourself with both machines before operating!

4895 RED BLUFF RD LORIS, SC 29569 (843) 756-2555

WWW.HARDEEBYEVH.COM EVHMFG@HARDEEBYEVH.COM

MODEL NUMBER _____

SERIAL NUMBER _____

DATE OF PURCHASE _____

	Customer Pre-Operation Check List	Reference
☐	Read, understand and follow the general safety rules listed in this manual.	Page 2
☐	Check all shields and guards.	Page 2
☐	Cut driveshaft to the proper length for your tractor.	Page 8
☐	Add ballast to the rear tractor tires and space them at their widest setting.	Page 8
☐	Add ballast and front weights to your tractor, if needed.	Page 8
☐	Check all fluid levels in the cutter.	Page 11
☐	Turn gate valve under the oil tank "on".	Page 12
☐	Check all grease fittings.	Page 15

Service Notice

Please take extra care while servicing the hydraulic system by keeping all openings properly covered, thus preventing contamination of the hydraulic components. Contaminates in the oil WILL cause faulty operation or premature failure of components in the hydraulic control valve, pump, and motor.

Disclaimer

THIS CUTTER IS NOT DESIGNED TO CUT TREES FROM TOP TO BOTTOM (VERTICALLY) WITH THE CUTTER DECK IN THE HORIZONTAL POSITION (See Fig. 1). The cutter is designed to trim branches with the cutter deck in the VERTICAL position while moving the tractor forwards or backwards, repositioning the cutter deck after each path (See Fig. 2).

The cutter is also designed to cut tree trunks and branches up to 4" in diameter with the "Hinged Gate" in the unlocked, secured raised position and the cutter deck in the HORIZONTAL position, perpendicular to the trunk and/or branch of the tree (See Fig. 3).

Any modes of operation other than the ones described above and shown below, while cutting trees and/or branches are not permitted and shall void the warranty. Moreover, HARDEE by EVH Manufacturing Company, LLC does not accept any liability to any person and/or material when the cutter is operated in violation of the above information.

Fig. 1

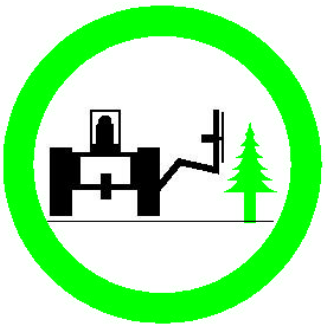

Fig. 2

Fig. 3

Table of Contents

To Our Customers

We at Hardee by EVH Manufacturing Company thank you for buying your new Long Reach Cutter.

We have tried hard to build a cutter to do the work you have in mind. Many hours of engineering, field-testing and improvement have gone into the design and fabrication of your cutter. We will strive to continue this quality of manufacturing in the future, always keeping the customer's needs clearly in mind.

The best performance of your cutter will depend on you. Proper lubrication, maintenance, hookup, adjustments and operation are essential for it to give you long and dependable service. However, as with any type of equipment, your cutter is designed to perform specific functions.

In this manual, you will find instructions on cutter features, maintenance and operation. If customer service or repair parts are required, contact your local Hardee dealer. Please specify model and serial number when ordering parts.

Owner's Responsibility

The manufacturer has no control over the ultimate use of the cutter and therefore assumes no responsibility or liability for damage or injury resulting from the use of this machine.

The upkeep of the hydraulic cutter is the responsibility of the user. This upkeep includes all shielding, guards, and safety decals (OSHA Regulation 1928.57). You can obtain replacement parts from any authorized Hardee dealer.

Read this Operator's Manual before operating the cutter. Failure to do so could result in injury to the operator or to others. Remember that most accidents occur due to neglect or carelessness. The operator is responsible for inspecting and making repairs as may be necessary. Cleaning after each use and storage under a shelter will extend the life of the cutter.

Purpose of This Manual

This manual provides information on safety, operation, adjustments, troubleshooting and maintenance of your new cutter. Please read and follow all the recommendations to help ensure that you get many years of service from your new Hardee cutter.

If you need additional copies of this manual, please contact your local Hardee dealer or download a copy from our website at www.evhmfg.com.

Safety-Alert Symbol

This symbol is the safety alert symbol. It appears throughout this manual to call your attention to instructions involving your personal safety and the safety of others. Failure to follow these instructions can result in injury or death.

Signal Words

Safety signal words are words that call attention to the safety sign and designate a degree or level of hazard seriousness. The signal words used throughout this manual are DANGER, WARNING and CAUTION. Please read and follow all safety messages that have these signal words shown for your protection.

DANGER

Indicates an imminently hazardous situation which, if not avoided, will result in death or serious injury.

WARNING

Indicates a potentially hazardous situation which, if not avoided, could result in death or serious injury.

CAUTION

Indicates a potentially hazardous situation which, if not avoided, may result in minor or moderate injury

Customer Assistance

The Hardee sales team would like you to be satisfied with your new Long Reach Cutter. If for some reason you have any questions about the information in this manual or have a problem with your cutter, please discuss the problem or question with the management of your local dealership. If further assistance is required, please contact:

EVH Manufacturing Company, LLC
Sales Department
4895 Red Bluff Road
Loris, SC 29569
843-756-2555

General Safety Rules

This section of your manual will address the safe operation of your new cutter. We at Hardee strive to produce a machine that is both a quality product and safe to operate. Please take the time to read, understand and follow the safety rules listed below and throughout this manual.

Your safety also depends on you becoming familiar with the basic operation of your new cutter. You can find complete instructions for this cutter in the Operation Instruction section of this manual. We believe that using your cutter safely, in a safe environment will give you great results!

DANGER

This machine is designed for use on a closed cab tractor only! If your tractor has an open cab, then it MUST be equipped with operator protective equipment in the form of shielding from thrown objects and Roll Over Protective Structure (ROPS) to operate this equipment safely.

DANGER

Rotary cutters have the inherent ability to throw debris considerable distances when the blades are allowed to strike foreign objects. The operator must use caution or serious injury may result. Be sure by-standers are at a safe distance at all times when the cutter is in use.

WARNING

Always keep your tractor level as you reach over ditches, etc. Be careful to keep ample distance between the rear tire and the top of the ditch bank to avoid a cave-in of the bank.

WARNING

Failure to keep the tractor level may result in loss of traction, tipping, rollover, property damage, personal injury or death.

WARNING

Never stand, or allow others to stand, under the boom or cutterhead at any time. Never park the unit without placing the cutterhead squarely and firmly on the ground. Serious injury or death by crushing may occur in case of hydraulic failure.

DANGER

Do not look under the cutterhead or attempt to remove objects or branches from under the cutterhead while the tractor is running. Serious injury, loss of limb or death may result.

DANGER

Do not reach under the cutterhead at any time. Cutting blades may cause serious injury, loss of limb or disfigurement.

WARNING

Never use the cutter for a crane or lifting device of any kind. It is not designed for this purpose. Serious damage to unit may occur. Serious bodily injury may be incurred from this misuse.

WARNING

Never use the cutter for a man-lift or personnel lift. It is not designed for this purpose. Serious damage to unit may occur. Serious bodily injury may be incurred from this misuse.

DANGER

Never operate the cutter within 10 feet of overhead power lines or utility lines. Do not trim trees with power lines running through them. Serious injury or death by electrocution may occur.

WARNING

Never allow the cutter to impact rock piles, piles of gravel, steel guardrails or concrete abutments. Contact with these objects could cause blade failure. Serious machine damage, property damage or bodily injury may occur. Check the area for these items before mowing.

DANGER

Never attempt to use the cutter to remove brush or trees larger than 4 inches in diameter. Failure to use caution when cutting trees, may lead to the tree falling on the cutter deck and tipping the tractor over.

Safety Decals

Your Hardee cutter ships with all safety decals in place. They are located in areas on the cutter that are potentially hazardous. Please locate, read and follow the information you find on these decals.

By law, you must replace any safety decals that are damaged or missing. You can order replacement decals from any local Hardee dealer. Just ask for part number 15845.

To apply the replacement decals:

- Clean the surface to place the new decal.
- Peel the decal away from the paper backing.
- Press firmly onto the clean surface.
- Squeeze out any air pockets using a straight edge.

Danger – Thrown Object

Danger – Rotating Driveline

Operating Safety and General Instruction

Warning – Thrown Object (PN 11005)

WEIGHT BOX

Safety Decals, continued

Deck

Warning – Rotating Components

Hitch Frame

Danger – Crushing Hazard

Hitch Frame

Warning – High Pressure Fluid Hazard

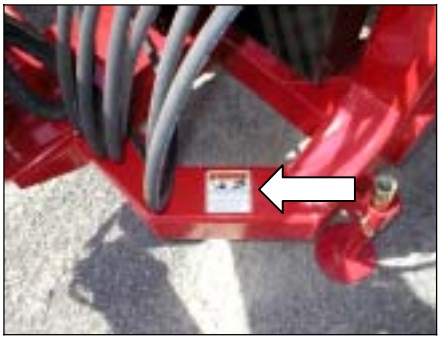

Hitch Frame

Deck

Safety Decals, continued

Deck Linkage

Deck Linkage

1st Stage Boom

1st Stage Boom

Warning – Pinch Point

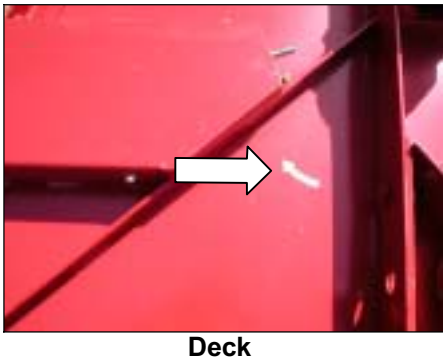

Deck

Blade Rotation

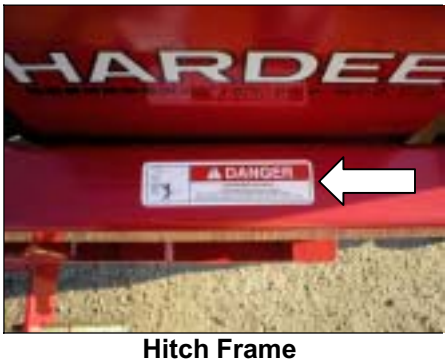

Hitch Frame

Danger – Crushing Hazard

Safety Decals, continued

Deck

Danger – Keep Clear

Hitch Frame

Danger – Electrocution, Falling and Crushing Hazard

Deck

Danger – Exposed Blades

Deck – Front/Rear

Weight Box – Front/Rear

15852 – Red Reflector, Rear
(Not Shown)

15853 – Yellow Reflector, Front

Component Identification and Terminology

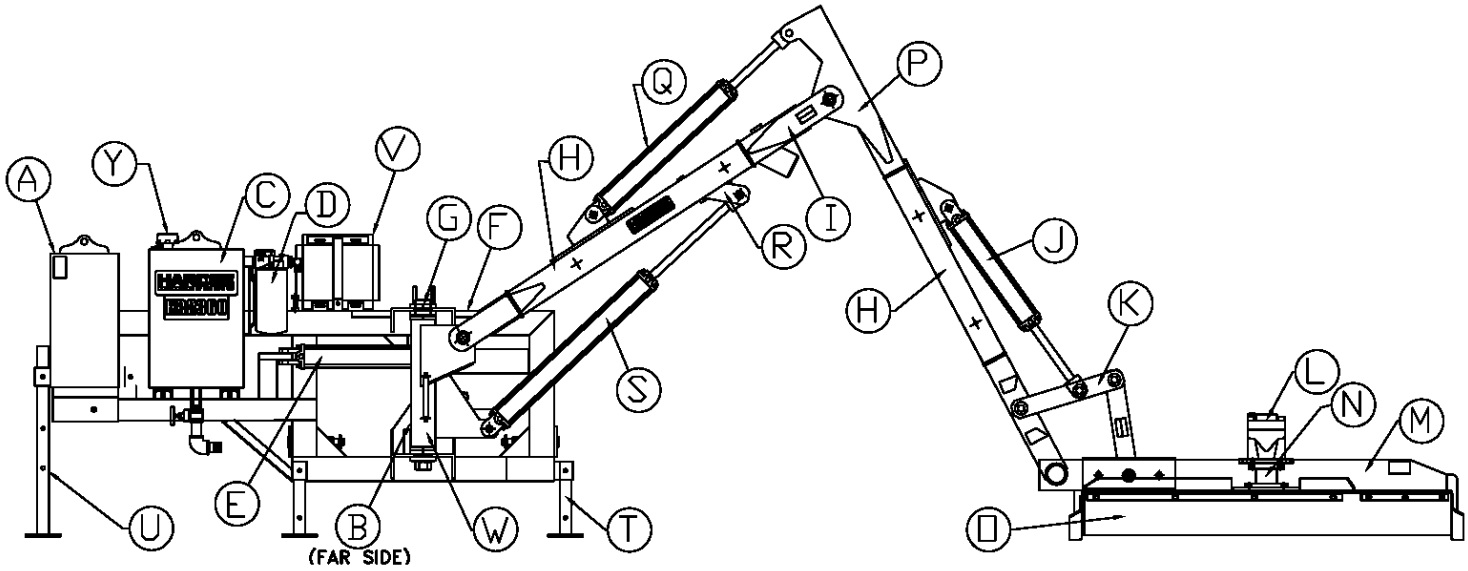

A	Weight Box	M	Deck
B	Hydraulic Pump(Far Side)	N	Motor Drive Housing
C	Oil Tank	O	Rubber Shielding
D	Return Filter	P	2nd Stage (Reach) Boom
E	Swing Cylinder	Q	2nd Stage Cylinder
F	Hitch Frame	R	Lift Break-Away
G	Swing Arm Shaft	S	1st Stage Cylinder
H	Hose Guard	T	Short Stand
I	1st Stage (Lift) Boom	U	Long Stand
J	Deck Cylinder	V	Oil Cooler
K	Deck Linkage	W	Swivel
L	Hydraulic Motor	Y	Breather/Fill Cap

Tractor Requirements

The Long Reach Cutter you have purchased is designed for tractors with 150 horsepower and above and weighing 15,500 lbs. plus, equipped with a 1000 RPM rear power take-off (PTO).

Your tractor must also be equipped with a standard hitch. A category 2 or 3 quick hitch can also be used with this cutter.

To insure stability of your tractor, the rear tires should be spaced at their widest setting. You should also add ballast to maintain proper steering control and balance. In addition, unless your tractor is 4-wheel drive, you may also need to add front weights. Please refer to the operator's manual for your tractor to determine the correct setup.

DANGER

This machine is designed for use on a closed cab tractor only! If your tractor has an open cab, then it MUST be equipped with operator protective equipment in the form of shielding from thrown objects and Roll Over Protective Structure (ROPS) to operate this equipment safely.

Driveshaft Installation

The make of your tractor will determine the length of driveshaft you require to connect from the end of the pump shaft to the PTO connection of your tractor. This step may require cutting the standard driveshaft included with the Hardee cutter. We recommend contacting your local Hardee dealer for assistance.

Driveshaft Installation on Pump Shaft

Refer to Figure 1 for reference

- ✓ Verify that driveshaft is the proper length.
- ✓ Grease both pump shaft and driveshaft.
- ✓ Attach equipment end of driveshaft to pump. *Tractor end has a figure of a tractor stamped onto the guard.*
- ✓ Rotate driveshaft to line up holes for securing with the bolt and nut provided.
- ✓ Fix shaft guard to the cutter using anti-rotation chain.

Figure 1

Tractor Hook-Up Procedures

- ✓ Hook Tractor 3-point hitch to cutter hitch frame. The HR2360 is designed to work with a standard, category 2 or 3 quick hitch.

WARNING

Before leaving the tractor seat, always engage the tractor brake and/or set the transmission of the tractor in parking gear. Stop engine and remove key.
Always make sure that no one is between the tractor and the cutter when tractor is in motion.

- ✓ Attach driveline to tractor (PTO shaft). *(See below for instructions)*
  - Verify that the shaft is sufficiently lubed before attachment.
  - Verify that drive shaft is the proper length.
- ✓ Connect joystick to bulkhead connector on the wire cover panel of the controller.
- ✓ Connect joystick to 12-volt system. (Cigarette lighter plug provided with Joystick. Hardee dealer can supply receptacle.
- ✓ Raise all jack stands before moving cutter.

Driveshaft Installation on PTO

WARNING

Never attempt any checks, repairs or adjustments with the tractor engine running or the PTO engaged. Adjustment of rotating parts with tractor engine running may result in severe personal injury or death if the PTO accidentally engages.

- ✓ Lift tractor PTO guard.
- ✓ Pull U-joint guard back along driveshaft.
- ✓ Press driveshaft yoke plunger in and slip driveshaft U-joint yoke onto splined PTO shaft. Ensure that yoke plunger returns to locked position.
- ✓ Position U-joint guard over driveshaft U-joint.
- ✓ Lower tractor PTO guard.
- ✓ Fix shaft guard to tractor with anti-rotation chain.

Hydraulic System Setup

IMPORTANT

The hydraulic system setup information contained in the following sections should be used only as a guide. Consult your local Hardee dealer or cutter manufacturer for more detailed information.

Working Safely with Hydraulic Lines

Purge all air from hydraulic system before attempting to raise or lower the cutter boom and deck.

DANGER

Stand clear if lowering or raising deck, hydraulic deck can fall suddenly from system failure.

DANGER

Do not use your hand or skin to check for hydraulic leaks, use cardboard or wood. High-pressure oil leaks can penetrate skin causing injury and gangrene. Consult a doctor immediately. Always wear safety goggles when working around high-pressure lines.

Description of Operation

The HR2360 is set-up at the factory as a self-contained hydraulic system. This means that the cutter pump powers **ALL** hydraulic functions.

A Programmable Processor *(Refer Page 25)* controls four cylinder functions (swing, first stage boom lift, second stage boom lift, and cutter deck tilt) and one motor function which drives the cutter head. A single tethered handheld grip serves as the operator input. The grip includes a dead-man bar, a left two-axis thumb controlled proportional joystick, a right two-axis thumb controlled proportional joystick and a momentary switch controlling a latching circuit turning the cutter head motor on and off. A proximity switch is used to decelerate the swing velocity near both stroke ends.

Joystick Functions

- ✓ Left X-axis (horizontal) controls Deck Down (W) and Deck Up (E).
- ✓ Left Y-axis (vertical) controls First Stage Boom Up (N) and Boom Down (S).
- ✓ Right X-axis (horizontal) controls Swing Left (W) and Swing Right (E). Proximity switch decreases output to Swing by 50% when actuated.
- ✓ Right Y-axis (vertical) controls Second Stage Boom Up (N) and Boom Down (S).
- ✓ LED should be Red when cutter head motor is active and Green when the system is active but the cutter head is off. LED remains active if dead-man is released until system hibernates.
- ✓ Push Button controls cutter head motor. Motor switches on when dead-man bar is depressed and push button is held for two seconds. Motor switches OFF when push button is instantly depressed or fifteen seconds after the dead-man bar is released.
- ✓ System becomes active when Dead-Man Bar is depressed for two seconds. Bar must remain depressed for all control functions to be active except for the fifteen second motor off delay mentioned above. System Hibernates after ten minutes of inactivity on the Dead-Man Bar.

Refer to Figure 2 for joystick functions on Page 10.

TETHERED GRIP WITH MICRO-JOYSTICKS

1W – DECK DOWN
1E – DECK UP
1N – 1ST STAGE BOOM UP
1S – 1ST STAGE BOOM DOWN

2W – SWING LEFT
2E – SWING RIGHT
2N – 2ND STAGE BOOM UP
2S – 2ND STAGE BOOM DOWN

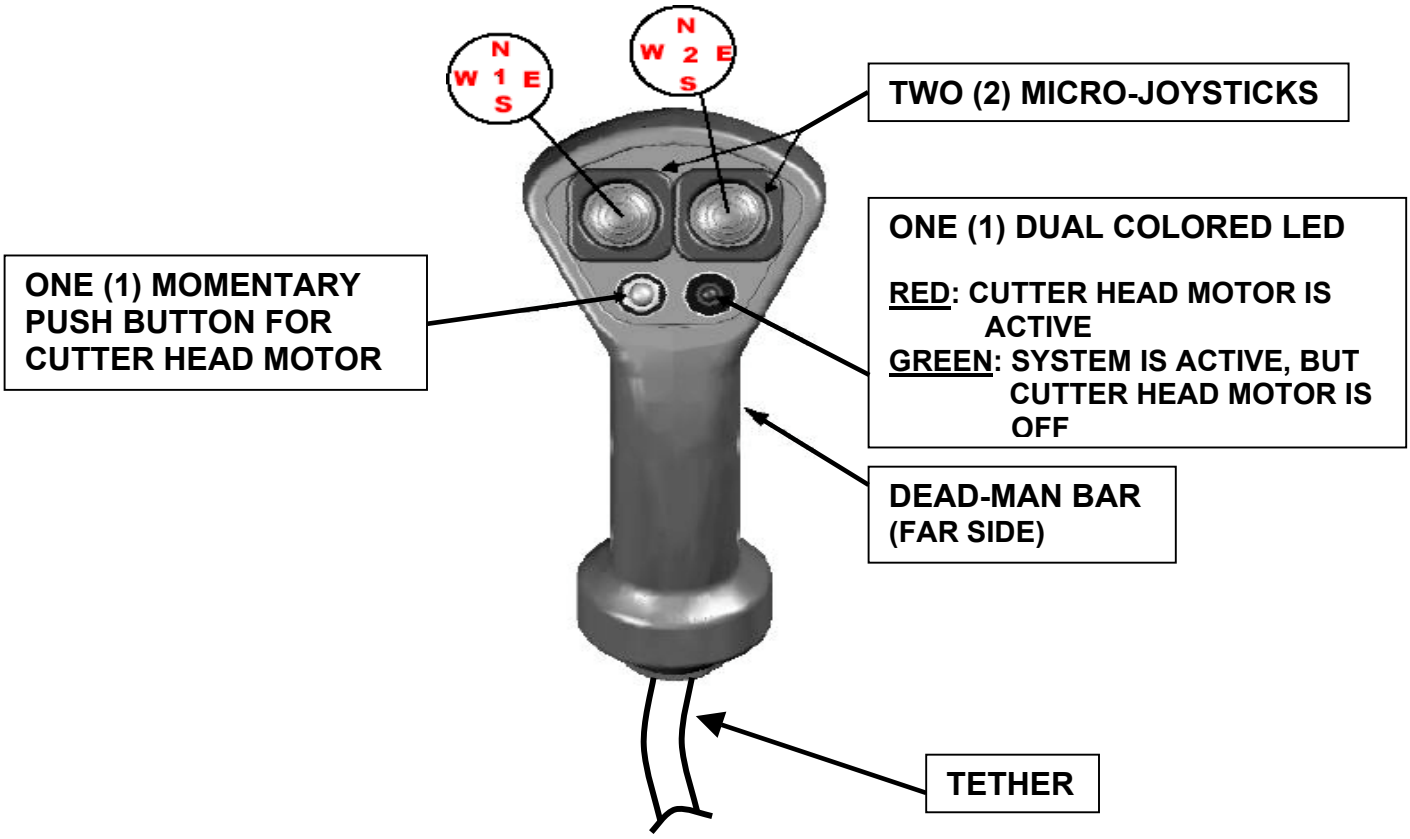

JOYSTICK RECALIBRATION

CLEAR CURRENT CALIBRATION

1.0 - POWER UP THE CONTROLLER BOX WITH JOYSTICK CONNECTOR (***ENGINE SHOULD BE SHUT OFF***).
2.0 - PULL "DEAD-MAN BAR" UNTIL GREEN LED COMES ON, THEN RELEASE "DEAD-MAN BAR".
3.0 - HOLD DOWN THE CUTTER HEAD SWITCH (***ENGINE SHOULD BE SHUT OFF***) WHILE PUSHING THE LEFT JOYSTICK (1) UP AND THE RIGHT JOYSTICK (2) DOWN FOR 5-SECONDS.
THE GREEN **LED** WILL BEGIN TO FLASH, INDICATING THE CALIBATION HAS BEEN RESET.

CALIBRATE JOYSTICK

4.0 -WITH JOYSTICK (1): PUSH AND HOLD IN EACH DIRECTION FOR 5 SECONDS EACH. **N, S, W** AND **E.**
5.0 -WITH JOYSTICK (2): PUSH AND HOLD IN EACH DIRECTION FOR 5 SECONDS EACH. **N, S, W** AND **E.**
6.0 -AFTER THE CALIBRATION HAS BEEN COMPLETED THE GREEN LED WILL STOP FLASHING.
7.0 -POWER DOWN THE CONTROLLER FOR 10 SECONDS AND THEN POWER UP THE SYSTEM AGAIN. PULL THE DEAD-MAN BAR FOR 2 SECONDS TO VERIFY THAT CALIBRATION WAS ACCEPTED (THE **LED** WILL BE A STEADY GREEN).

NOTE: THE BOOM AND SWING FUCTIONS WILL NOT WORK UNTIL ALL POSITIONS OF THE JOYSTICKS ARE CALIBRATED.

Operation Instructions

During Operation

WARNING

Ensure that all bystanders are clear of the cutter before starting tractor engine. Objects thrown by the cutter blades can cause severe personal injury or death.

Before any operation of the cutter, be familiar with the locations and functions of the unit's controls. Being familiar with the cutter and its controls will increase efficiency and reduce the possibility of serious injury or damage to the unit.

The operator should work slowly and carefully until he feels comfortable with the cutter. Speed and skill will be attained much more easily if the necessary time is spent to familiarize yourself with the cutter and its operation.

Get into the habit of completing a walkaround inspection before use. This procedure is a simple method of inspecting your unit's condition by walking around and looking at each component of the unit, including the tractor. This procedure has been used by airline pilots for many years as a final inspection before flight and is also used by long distance ground transportation drivers on buses and trucks. During the walkaround, you will visually search your units tire condition, look for hydraulic leaks, fuel leaks, inspect hose condition and condition of hydraulic cylinders. Look for loose or worn components, see that all guards are in place, check blade condition, look for broken or inoperative lights and determine that it is or is not operable before use. We recommend that you follow this procedure before start up.

Daily Start-Up Checklist		
	Check	Section
☐	Check All Fluid Levels on the cutter, *For best results, use Hardee hydraulic oil – part number 23333*	-
☐	Grease Points	Page 15
☐	PTO Shaft, Check Grease	Page 15
☐	Blade Tightness	Page 16

Operating Environment

Application Do's and Don'ts

There are obvious and hidden potential hazards in operating this mower. **REMEMBER!** This machine is often operated in rough terrain conditions that include gullies, holes, slopes and hidden obstructions. Serious injury or even death may occur unless care is taken to assure the safety of the operator and bystanders in the area.

Included here is a list of safety messages, which should be followed. Observing these messages and using common sense learned from experience help eliminate the hazards of operating this and other machinery.

DANGER

Read this manual and the manual for the tractor carefully to acquaint yourself with both machines before operating. ***REMEMBER****, power-driven equipment should be operated only by those trained and familiar with the operation and instructed to do so. Working with unfamiliar equipment or in unfamiliar conditions can lead to accidents.*

WARNING

Before leaving the tractor seat, always engage the tractor brake and/or set the transmission of the tractor in parking gear. Stop engine and remove key.

DANGER

Never allow riders on tractor or equipment. Falling off can cause serious injury or death.

WARNING

Worn or dull cutter blades can cause excessive cutter vibration resulting in damage to the gearbox and structural damage to the cutter. You should replace or sharpen blades in pairs. Excessive vibration can cause rotating parts to break and fly off the cutter, causing serious injury or death to the operator or bystanders.

DANGER

Do not modify or alter this machine or any of its components or any equipment function without consulting EVH Manufacturing Company.

Using Your Cutter

Getting Started
You will need to spend some time getting the "feel" of your new cutter. Spend time reviewing the following steps before using your cutter for the first time. The time that you take will greatly enhance your ability to get the desired results when you begin mowing.

- ✓ Locate the pendant grip and move the two joysticks through the positions shown on the instruction decal.
- ✓ The next step is to attach the cutter to the tractor, see the hook-up procedures on page 8 for complete instructions. After you have the cutter attached, double check to ensure that no part of the tractor is in contact with the cutter.
- ✓ Next, follow the instructions for installing the driveshaft. Check to see that all PTO guards are in place correctly.
- ✓ Connect joystick cable to the bulkhead connector on the wire cover panel. Make sure that all hoses and the joystick connection cable will not contact the PTO shaft. Use Velcro straps to tie pendant cable to top link.
- ✓ Check the blades for sharpness. Check the blade carrier castle nut and both blade bolts for tightness. Verify that the gate valve under the oil tank is "on". *The cutter is shipped with the gate valve in the "off" position.*

⚠ Danger
Before proceeding, make sure that no other persons are in close proximity to the cutter!

- ✓ With all controls in neutral, the tractor in park, the throttle in idle position and the joystick power switch off… Start the tractor engine.
- ✓ Slowly engage the PTO shaft.
- ✓ Now with the cutter under power, practice using the joystick to control the movement of the cutterhead and boom arms.

After you feel comfortable with the basic cutter control, the next step is to start the blades:

- ✓ Hold lower left-hand button for two (2) seconds or until LED turns red.

⚠ Danger
Do not change the blade rotation direction! Blades must rotate in the clockwise direction indicated by the rotation decal on the mowing deck.

- ✓ After the cutter is running smoothly, increase the tractor to 800 PTO RPM (Max.1000 RPM) and lift the cutterhead off the ground. Swing the cutterhead to the mowing position, which is three o' clock on the right side of your tractor. (If moving in reverse, swing deck back 15º).
- ✓ Release the tractor from park and put the transmission in low range. You are now in mowing mode and are underway.

The terrain and the kind of material being cut will determine your ground speed. Remember that you will need to raise and lower the cutterhead to follow the ground contour you are cutting.

Boom Breakaway
The HR2360 is designed with an automatic breakaway system to protect the cutter booms. This works when the cutterhead contacts a solid obstruction or the cutterhead is "grounded" while the tractor is in motion. The breakaway is activated through the hydraulic valve and will function mowing both forward and backward.

When the cutterhead strikes a solid object the booms will begin to break back, **IMMEDIATELY** stop your tractor and adjust the position of the booms to clear the object.

If you "ground" the cutterhead and the booms begin to break back, simply lift the boom slightly to free the cutterhead, then swing the boom back into normal cutting position. *See figure 3.*

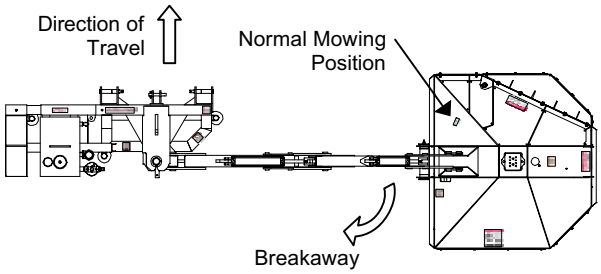

Figure 3

Mowing in Reverse
Your Hardee unit can cut as easily when the tractor is moving in reverse as forward. The breakaway protection works in the same way. The only difference being you must swing the booms to the rear 10 – 15 degrees. This will allow for more boom breakaway travel. This space is critical so as not to bottom-out the boom arm. *See figure 4.*

Caution

You will do severe damage to your cutter if you allow the boom arm to reach the bottoming-out point!

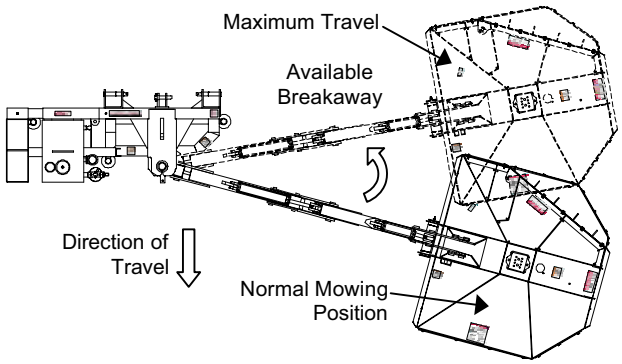

Figure 4

Caution

You must allow for the extra boom travel when mowing in reverse. See figure 3. If you have any questions about these instructions, please ask your local Hardee dealer immediately! Warranty claims for equipment used improperly will not be accepted.

Side Dressing Trees
The design of your heavy-duty brush cutter will allow you to "side dress" trees if needed. To do this, raise the booms to the desired height and tilt the cutterhead to the vertical position. With the blades "on" move forward slowly, removing only approximately 12 inches of material per pass.

DANGER

Never operate the cutter within 10 feet of overhead power lines or utility lines. Do not trim trees with power lines running through them. Serious injury or death by electrocution may occur.

Cutting Larger Brush and Trees
A unique feature on the HR2360 is the cutterhead "HINGED GATE". The "HINGED GATE" is used when you need to remove trees as large as 4 inches in diameter. This is accomplished in the following manner:

- ✓ Be sure that the cutter blades and tractor are turned "OFF".
- ✓ Unlock the "HINGED GATE" by removing the two bolts. *Refer to Figure 5 & 6 on Page 14.*
- ✓ Replace one bolt on the main deck for storage and use the second bolt to lock the gate in its raised up position.

Figure 5

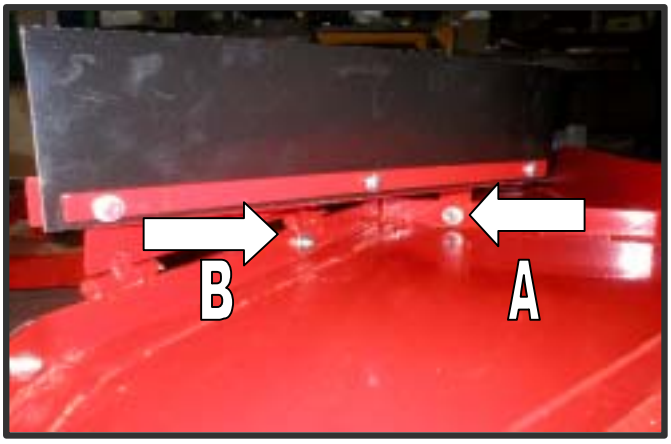

Figure 6

Figure 6 shows the two sets of bolts, nuts and washers that go on the "HINGED GATE". Bolt A is used to lockdown the hinged gates to the HR2360 DECK when cutting trees and bolt B is tightened onto the deck for storage during the tree-cutting process.

⚠ DANGER

Never attempt to use the cutter to remove brush or trees larger than 4 inches in diameter. Failure to use caution when cutting trees, may lead to the tree falling on the cutter deck and tipping the tractor over.

Unhook and Post Use Care

Before unhooking the tractor from your mower, always clean the unit thoroughly to remove any grass, mud or debris. This mower should always be stored on a hard level surface.

Unhooking the HR2360

- ✓ To unhook from your unit, first lower all jack stands to the storage position.
- ✓ Lower the tractor lift arms so that the mower will rest firmly and evenly on all jack stands.
- ✓ Lower the boom arms and cutter deck so that they too rest firmly and evenly on the ground.
- ✓ Be sure to relieve all hydraulic pressure on the boom arms and deck before unhooking.
- ✓ Disconnect driveshaft from tractor.
- ✓ Disconnect pendant cable at the bulkhead connector on the wire cover panel.
- ✓ Unhook tractor hitch from 3-point frame on mower.

Post Use Care

- Never leave driveshaft hanging down and touching the ground.
- Store joystick inside in a dry place.

Maintenance and Service Schedule

This section is dedicated to the maintenance of the HR2360. As with any piece of equipment, the performance and life span depends on the proper operation and maintenance.

DANGER

Never attempt any checks, repairs or adjustments with tractor engine running or the power take-off engaged. Adjustment of rotating parts while the tractor engine is running can result in serious personal injury or death if the PTO accidentally engages.

First Stage Boom

Inject with heavy multi-purpose grease. There are five grease fittings on the swing post.

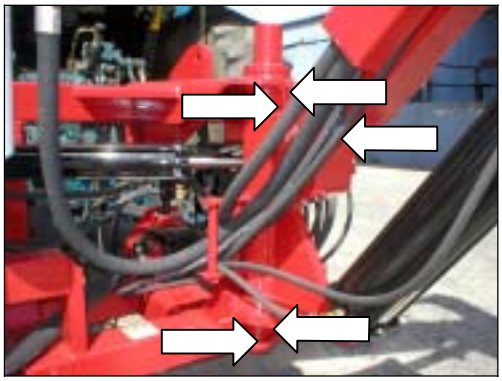

First Stage Boom to Second Stage Boom

Inject with heavy multi-purpose grease. *There is a grease fitting at every hinge point.*

Deck and Second Stage Boom

Inject with heavy multi-purpose grease.

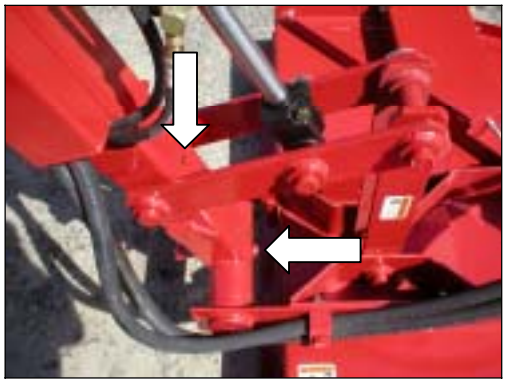

Hydraulic Motor Housing Assembly

Locate fitting on the motor housing. Inject with 90W-gear oil.

Greasing PTO Driveshaft to Pump

Remove PTO shaft from cutter before greasing. Use heavy multi-purpose grease at all grease fitting and on shaft. Remember to grease the shield grease fittings as well as the u-joints.

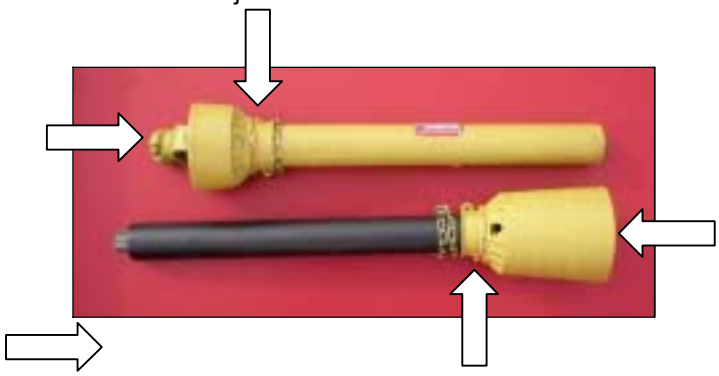

Inspection and Replacement of Blades

The cutting blades on the Hardee cutter are designed and made to exact specifications and should be replaced with only original Hardee parts. Always replace blades in pairs to retain balance on the blade holder. Never weld the blades, as this will change the temper of the steel. Never modify the blades. Check for cross sectional thickness (5/8") and deterioration of blades. Replace as necessary.

When the replacement of cutter blade is required, a few rules should be followed:

- Replace blades in pairs.
- Inspect bolt holes.
- If bolt holes are elongated, replace blade holder. *See instructions below.*
- Cutting heavy brush causes excess stress on the blade bolts, because of this they will require inspection that is more frequent.
- When replacing blades always replace bolts and nuts. Never reuse blade bolts and nuts.

Inspection and Replacement of Blade Holder

Inspection

✓ First, completely extend boom. Rotate cutter deck all the way up; drop boom until deck rests on ground. Switch off tractor, secure parking brake and remove key.

✓ When inspecting, pay particular attention to any small hairline cracks between spindle bolt hole and blade bolt holes. This indicates metal fatigue from severe abuse and holder must be replaced.

✓ Blade and spindle bolts and nuts should be checked daily.

Replacement

✓ Remove cotter pin and castle nut.

✓ With an assistant, carefully remove the blade holder.

✓ Then position the new blade holder in place.

✓ Replace the castle nut and cotter pin. *See parts breakdown drawing on Pages 28-31 for reference.*

Checking the Main Relief Valve

The HR2360 is equipped with a cutter-head relief valve that comes pre-set from the factory. This valve is installed in the side of the manifold and identified with the number "3“. Before checking the pressure on the valve, make certain that a clean filter is installed and that the reservoir contains the correct amount of hydraulic oil.

The procedure to check the pressure on the cutter-head relief is as follows:

✓ Start the tractor and with the tractor in park, place the cutter-head on the ground. Engage the tractor PTO to power the cutter-head and increase engine speed until 800 (Max. 1000) PTO RPM is reached. Allow the mower to run at this speed for 3 to 5 minutes.

✓ Disengage the PTO and stop tractor engine.

✓ Remove the motor pressure line (“MP”) and plug it. Install a 3000 or 5000 psi pressure gauge into the 4-M-SAE outlet (“GP”) adjacent to the relief valve. Place the loose pressure line in a clean container to catch any spillage.

Caution

Be sure all fittings are tight before proceeding!

✓ Start the tractor engine and increase engine speed to 1200 **ENGINE** RPM. Engage tractor PTO and immediately observe the pressure reading and disengage tractor PTO. (If pressure reads 2700 psi (+/- 150 psi), you may proceed.)

✓ Increase tractor engine speed to 800 (Max.1000) PTO RPM. Engage tractor PTO and immediately observe the pressure reading and disengage tractor PTO.

The correct pressure setting is 2700 psi. If the reading is less than 2550 or more the 2850, contact your local Hardee dealer for assistance.

Caution

Never let the unit operate in the capped position for over 5 seconds. A reading can be obtained accurately in this amount of time.

✓ Now you can remove the cap and gauge, and re-install the pressure line.

CAUTION

Never vary from the 2700-psi cutterhead pressure. Failure to comply with this specification will cause severe hydraulic heat, loss of power and damage to components.

DANGER

Exceeding 2700 psi will cause premature hose failure (rupture), and possible bodily injury or property damage.

Cylinder Speeds

The HR2360 is equipped with a "Proportional Control" feature in the main control valve that allows the operator to control the travel speed of individual cylinders with the amount of movement on the thumb actuated joysticks.

Adjusting the Cylinder Control Valve

The HR2360 comes from the factory with the cylinder control valve pre-set at the proper pressures. There is a main relief (Item P), and seven individual cylinder counterbalance valves (Items 5D2; 5D1; 5C2; 5C1; 5B2; 5B1; 8A2; 8A1). *The chart on page 18 lists the proper settings for these valves.*

The procedure for checking the pressures on the cylinder control valve is as follows:

Cylinder Relief Valve (ITEM P)

- ✓ Rest the deck of the HR2360 on the ground to relieve all pressures on the hydraulic lines.
- ✓ With the tractor engine off and parking brake set, remove the hydraulic test port plug *(see page 19 for gauge port locations)*. Install a 3000 or 5000 psi pressure gauge with a SAE 4-M-ORB fitting into the hydraulic test port and place the gauge where you can easily see it from a safe distance.
- ✓ Start the tractor and bring the engine up to operating speed 800 (Max.1000) PTO RPM. Activate the joystick, raise the cutter deck off the ground, and swing the boom so that it is straight behind the tractor.
- ✓ Activate the joystick in the "HEAD UP" position until the deck cylinder fully retracts. Continue to hold the joystick in this position for not more than 5 seconds at a time, and have someone read the pressure on the gauge.

WARNING

While reading the gauge, be careful not to stand in an area where inadvertent movement of the booms could trap or crush you. If you fail to heed this warning, **SERIOUS INJURY OR DEATH COULD OCCUR**.

The correct pressure setting for the cylinder relief is 2500 psi.

To increase or decrease pressure, insert a 1/4" allen-wrench into the adjusting stem at the top of the valve. Loosen the 3/4" lock nut at the base of the stem slightly, and then turn the adjusting stem to make your pressure change. Re-tighten the stem lock nut

Note: *The allen-head adjusting stem increases pressure when turned clockwise and decreases pressure when turned counterclockwise. Pressure increases or decreases rapidly with only a slight movement. Move adjusting stem in increments of 1/4 turn or less.*

CAUTION

NEVER attempt to adjust the valve when in the "on" (loaded) position. Always make adjustments in the "off" (neutral) position with the tractor engine turned off.

When 2500 psi is obtained, retighten the jam nut. Then re-test the pressure to be sure 2500 psi is retained.

- ✓ When the adjustment is complete, rest the cutter deck back on the ground to relieve pressure in the hydraulic lines. Remove the pressure gauge and re-install the hydraulic test port plug.

Individual Cylinder Counterbalance Valves (5D2; 5D1; 5C2; 5C1; 5B2; 5B1; 8A2; 8A1;)

Each cylinder has counterbalance valves that provide both work port relief and load control. These valves are 100% inspected and pre-set from the factory to ensure the proper settings. Do not alter the settings on these valves.

If you need assistance, contact your local Hardee dealer.

HR2360 CONTROL VALVE PORT LISTING

Item	EVH P/N		Description	Code	Setting	Torque	Coil Nut
A	16262	Stem	Solenoid Valve (Deck Cyl. Control)	4A		25 ft lbs.	2.5 ft lbs.
	16263	Coil					
B	16262	Stem	Solenoid Valve (II stg Boom Control)	4B		25 ft lbs.	2.5 ft lbs.
	16263	Coil					
C	16262	Stem	Solenoid Valve (I stg Boom Control)	4C		25 ft lbs.	2.5 ft lbs.
	16263	Coil					
D	16262	Stem	Solenoid Valve (Swing Control)	4D		25 ft lbs.	2.5 ft lbs.
	16263	Coil					
E	16258		Counterbalance Valve (Swing Right)	8A1	1300 PSI	35 ft lbs.	
F	16258		Counterbalance Valve (Swing Left)	8A2	1300 PSI	35 ft lbs.	
G	16256		Counterbalance Valve (1st Stage Up)	5B1	2500 PSI	35 ft lbs.	
H	16256		Counterbalance Valve (2nd Stage Down)	5C1	1800 PSI	35 ft lbs.	
I	16256		Counterbalance Valve (2nd Stage Up)	5C2	3300 PSI	35 ft lbs.	
J	16256		Counterbalance Valve (Deck Down)	5D1	1800 PSI	35 ft lbs.	
K	16257		Counterbalance Valve (Deck UP)	5D2	3300 PSI	35 ft lbs.	
L	16523	Stem	Proportional Flow Control	2		50 ft lbs.	2.5 ft lbs.
	16524	Coil					
M	16259		Cylinder Relief Valve	7	2500 PSI	25 ft lbs.	
N	N/A		Check Valve	13		130 ft lbs.	
O	16260	Stem	Solenoid Valve (Deck Motor Control)	9		22 ft lbs.	
	16261	Coil					
P	16255		Main Relief	3	2700 PSI	37 ft lbs.	
Q	N/A		Pilot Opp. Dir. Valve	6		80 ft lbs.	2.5 ft lbs.
R	N/A		Return Port	T			
S	N/A		Pump Port	P			
T	N/A		Deck Motor Pressure Port	MP			
U	N/A		Deck Motor Return Port	MPR			
NOT SHOWN	16496		Main Controller				
NOT SHOWN	16278		JOYSTICK WITH WIRE HARNESS				
NOT SHOWN	16249		PROX SENSOR FOR SWING				
NOT SHOWN	16497		HITCH FRAME WIRING HARNESS FOR MAIN CONTROLLER				
NOT SHOWN	16637		Single Micro Joysticks for 16278 Joystick				
NOT SHOWN	16181		Wire Harness for HR2360/LR50160 Joystick 16278				

CONTROL VALVE PORT SCHEMATIC

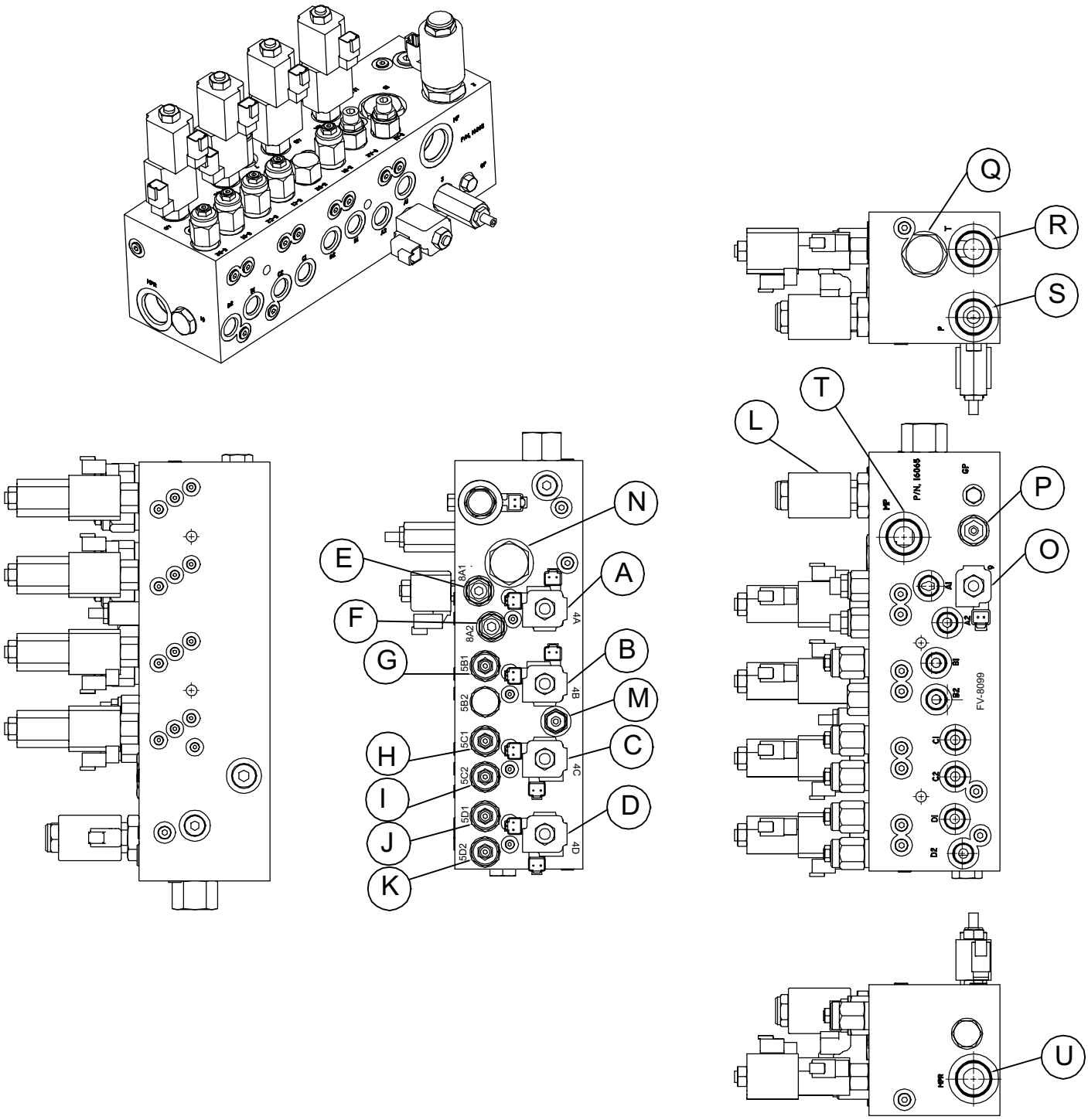

HR2360 Valve / Joystick Wiring Schematic					
Function	**Valve Port**	**Coil**	**Wire Color (+)**	**Connector No.**	**Handle Position**
Swing (Boom) Right	8A1	A - Top	White	C10	Right (E)
Swing (Boom) Left	8A2	A - Bottom	White	C9	Left (W)
1st Stage Up	5B1	B - Top	White	C17	Up (N)
1st Stage Down	5B2	B - Bottom	White	C16	Down (S)
2nd Stage Down	5C1	C - Top	White	C12	Down (S)
2nd Stage Up	5C2	C - Bottom	White	C11	Up (N)
Deck Down	5D1	D - Top	White	C15	Left (W)
Deck Up	5D2	D - Bottom	White	C14	Right (E)
Deck Motor	9	O	Black	C19	Any
Proportional Control	2	L	Black	C20	Any

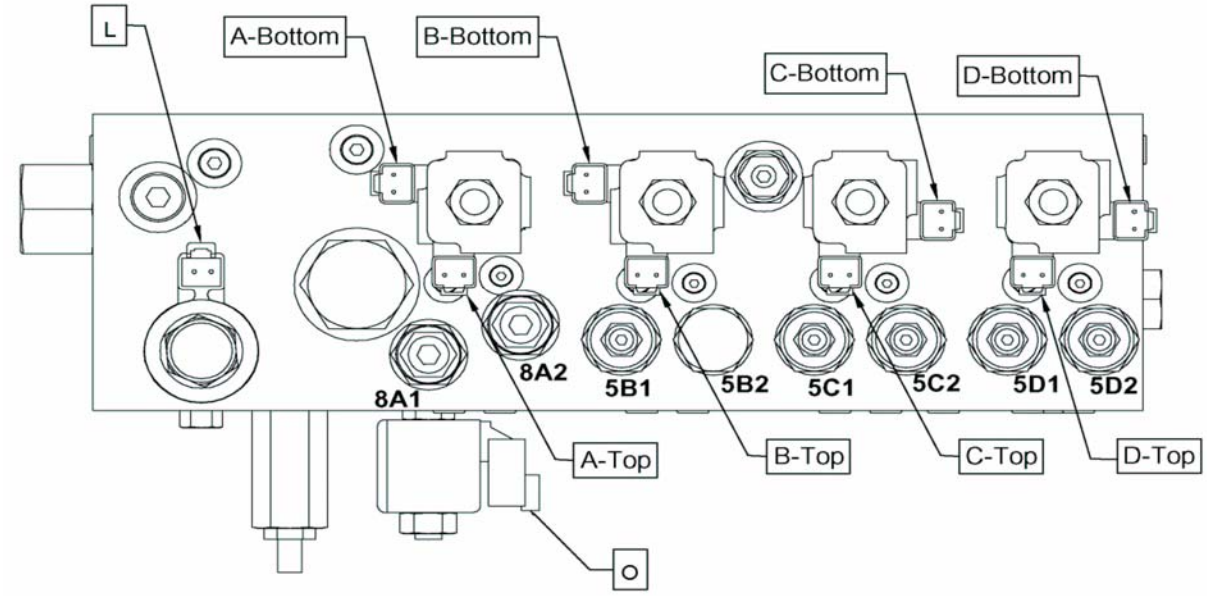

Routine Maintenance Checklist

Interval	Item	Check	Lube	Change	Comments
Daily Or 10 Hours	Pump Drive Shaft		•		
	Pivot Points		•		
	Grease Fittings		•		
	Blades	•			Change If Damaged
	Blade Bolts (Blade To Blade Holder)	•			Torque to Spec. on Blade Holder Breakdown
	Blade Holder Nut	•			Torque to Spec. on HR2360 -Parts Breakdown
	Hydraulic Fluid Level	•			
	Spindle Bolts (Spindle To Deck)	•			
	Main Frame And Deck Bolts	•			
	Rubber Shielding	•			Change If Damaged
Weekly Or 50 Hours	Hydraulic Return Filter			•	Change After 1st 50 Hours, Then Every 500 Hours
	Hydraulic Fittings	•			
Monthly Or 150 Hours	Tank Breather	•			
	Hydraulic Fluid Level	•			
Seasonal Or 500 Hours	In Tank And Return Hydraulic Filters			•	

Troubleshooting Guide

Hydraulic System, Blade System, Pump, Motor, Fluid Lines

Problem	Possible Cause	Solution / Correction
Cylinder Will Not Operate	No Power To Joystick	Repair / Replace Connections
	Fuse Blown Inside Lighter Plug	Replace Fuse
	Joystick Not Connected To A 12-Volt System	Connect To 12-Volt Power Supply
	Joystick Not Connected To Valve	Examine Bulkhead Connection To Cutter
	Proportional Valve Not Functioning	Repair Electrical Connections To Solenoid Or Proportional Valve
Head Drifts Back When In Operation	Improper Counter Balance Valve Setting	Adjust Counter Balance Valves To Specifications (Refer To Pages 18 - 19)
	Cylinder Leakage	Repair / Replace Cylinders
Boom Drifts Down	Improper Counter Balance Valve Setting	Adjust Counter Balance Valves To Specifications (Refer To Pages 18 - 19)
	Cylinder Leakage	Repair / Replace Cylinders
Leaking Motor	Motor Seal Blown	Repair / Replace Seal And Check Filter For Blockage (Repair / Replace Filter)
Blades Loose Speed In Cutting	Improper Relief Valve Setting	Check Relief Valve Setting (Refer To Pages 18 - 19)
		Repair / Replace Relief Valve
	Proportional Valve	Check for trash or Replace
	Poppet Valve in Motor	Check/Replace Poppet valves in motor
Pump Whines	Worn Or Damaged Pump	Repair / Replace Pump (Make sure gate valve is open)
	Improper Oil In System	Replace Oil
		Requires Hardee Oil Part NO 23333 Or Comparable Oil With Proper Viscosity
	Pressure Setting on Relief Valve Too Low	Check Relief Valve Setting (Refer to Pages 18-19)
Motor Whines	Worn or Damaged Motor	Repair / Replace Motor
	Improper Oil In System	Replace Oil
		Requires Hardee Oil Part NO 23333 Or Comparable Oil With Proper Viscosity
	Pressure Setting On Relief Valve Too Low	Check Relief Valve Setting (Refer To Page 18)
Motor Seal Continually Blows Out	Internal Poppet Valve Damaged	Replace Poppet Valves
Unit Vibrates Severely	Broken Blade	Replace Blades, Blade Bolts And Nuts (Refer To Page 16)
	Blade Holder Loose	Repair / Replace Blade Holder (Refer To Page 16)
	Loose Output Shaft	Repair / Replace Shaft's Bearings In Cutter Head Housing
Cutter Head Grinds And Roars When Operating	Worn Bearings Or Improper Lubrication In Cutter Hydraulic Motor Housing	Repair / Replace Components (Bearing, Seals And Housing) As Required

Troubleshooting Guide, continued

Hydraulic System, Blade System, Pump, Motor, Fluid Lines

Problem	Possible Cause	Solution / Correction
Individual Cylinders Leak Down	Blown Or Worn Cylinder Packing	Repair / Replace Cylinder
Relief Valve Will Not Adjust To Specifications	Defective Or Worn Valve Seat	Repair / Replace Relief Valve And Adjust To Specifications
	Worn Pump	Replace Pump
	Gate Valve Closed	Open Gate Valve
	Hydraulic Valve Cracked Internally	Repair / Replace Valve
	Improper Oil	Repair / Replace Oil (Use Hardee Oil Part No. 23333)
No Power To Control Box	No Power To Joystick / Joystick Not Connected To A 12-Volt System	Connect To 12-Volt Power Supply
	Improper Connection To Joystick	Repair / Replace Connections
	Fuse Blown Inside Cigarette Lighter Plug	Replace Fuse
Filter Gauge Is In The Red At All Times	Filter Restricted	Repair / Replace Filter
	Bad Gauge	Repair / Replace Gauge
	Hydraulic Oil Too Heavy For Region Or Climate	Replace Oil
PTO Shaft Won't Telescope	PTO Shaft Not Lubed Properly	Lube Driveshaft (Per Daily Routine Check Sheet On Page 15)
	Bent Shaft	Replace PTO Shaft
Excessive Slack In Boom Hinges	Pins Worn	Repair / Replace Pins
Beams Squeak When Operating	No Lubrication Or Improper Lubrication	Lube Hinge Points (Per Instructions On Page 15)
	Defective Lube Fittings	Repair / Replace Fittings
Boom Operates Erratically	Speed Is Too Fast	Call HARDEE Dealer
	Defective Controller	Check Blink Codes on Page 24
	Air In Lines	Purge Hydraulic Lines
	Proportional Valve	Trash in Valve
Blades Won't Start-Up	Oil Flow Restricted	Open Gate Valve
		Repair / Replace Hydraulic Lines
		Replace In-Tank Filter
	Blade Off/On Switch or Electric Circuit	Check for 12-volts at Coil
	Proportional Valve	Trash in Valve
		Check Coil

Fault Codes for Status LED

Blink Code	*Reason for Fault*	*Corrective Action*
21	Left Joystick X axis Voltage out of range	Check Joystick and wires
22	Left Joystick Y axis Voltage out of range	Check Joystick and wires
23	Right Joystick X axis Voltage out of range	Check Joystick and wires
24	Right Joystick Y axis Voltage out of range	Check Joystick and wires
25	Left X axis No cal	Recalibrate the Joysticks
26	Left Y axis No cal	Recalibrate the Joysticks
27	Right X axis No cal	Recalibrate the Joysticks
28	Right Y axis No cal	Recalibrate the Joysticks
31	Stage 1 Down/Stage 2 Down Output Open or Short Circuit	Check valve coil and wires
32	Proportional Unloader Output Open or Short Circuit	Check valve coil and wires
33	Head Down/Swing Right Output Open or Short Circuit	Check valve coil and wires
34	Head Up/Swing Left Valve Output Open or Short Circuit	Check valve coil and wires
35	Cutter Head Motor Valve Output Open or Short Circuit	Check valve coil and wires
36	LED Output Open or Short Circuit	Check valve coil and wires
37	Stage 1 Up/Stage 2 Up Output Open or Short Circuit	Check valve coil and wires
38	Relay Driver Output Open or Short Circuit	Check relay and wires

How to interpret the “BLINK CODE”:

On the bottom of the Controller Box, locate two (2) LED’s; one Red; one Green. Whenever the red LED lights up you may see the following “BLINKS”:

- (2) Red “BLINKS” – pause – (1) Red “BLINK” = “BLINK CODE” 21
- (3) Red “BLINKS” – pause – (6) Red “BLINKS” = “BLINK CODE” 36

ETC.

- Now check “Reason for Fault” and “Corrective Action” opposite the corresponding “BLINK CODE”.

MC024-020-00000 PLUS+1 CONTROLLER

Dimensions and Pin Assignment

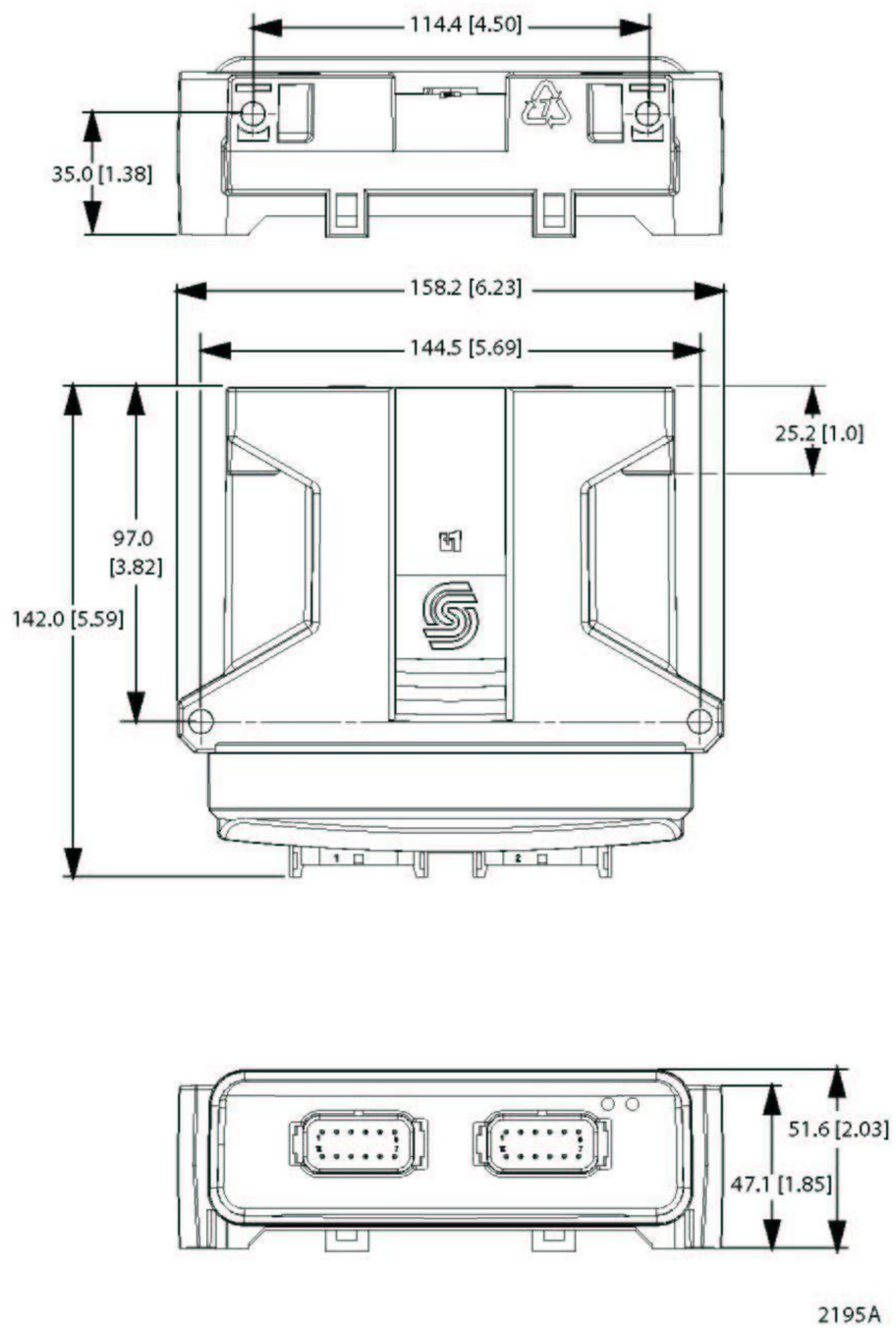

MC024-020-00000 mounting dimensions

DIN/AIN/FreqIN	C2-P1
DIN/AIN/FreqIN	C2-P2
PWMOUT/DOUT/PVG Power supply 1	C2-P3
PWMOUT/DOUT/PVG Power supply 2	C2-P4
PWMOUT/DOUT/PVGOUT 1	C2-P5
PWMOUT/DOUT/PVGOUT 1	C2-P6
PWMOUT/DOUT/PVGOUT 1	C2-P7
PWMOUT/DOUT/PVGOUT 2	C2-P8
PWMOUT/DOUT/PVGOUT 2	C2-P9
PWMOUT/DOUT/PVGOUT 2	C2-P10
Power Supply +	C2-P11
Power Supply +	C2-P12

Power ground -	C1-P1
Power supply +	C1-P2
CAN +	C1-P3
CAN -	C1-P4
AIN/CAN shield	C1-P5
DIN	C1-P6
DIN	C1-P7
5 V DC sensor power +	C1-P8
Sensor power ground -	C1-P9
DIN/AIN/FreqIN	C1-P10
DIN/AIN/FreqIN	C1-P11
DIN/AIN/FreqIN	C1-P12

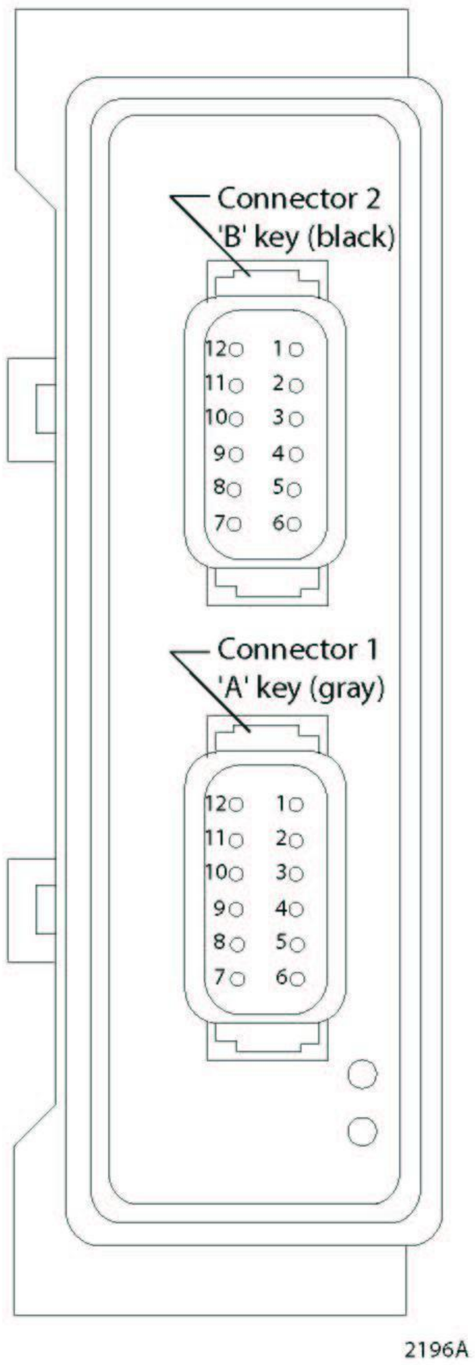

MC024-020-00000 24 pin connector

Specifications

Product Parameters	
Supply voltage:	9 to 36 V
Operating temperature (ambient):	-40 to 70° C
Storage temperature:	-40 to 85° C
IP rating:	IP 67
EMI/RFI rating:	100 V/M
Weight:	0.40 kg (0.88 lb)
Vibration:	IEC 60068-2-64
Shock:	IEC 60068-2-27 test Ea
Maximum current, sourcing:	24 A
Maximum current, sinking:	8 A

HR2360 ELECTRONIC SCHEMATIC

CONTROLLER

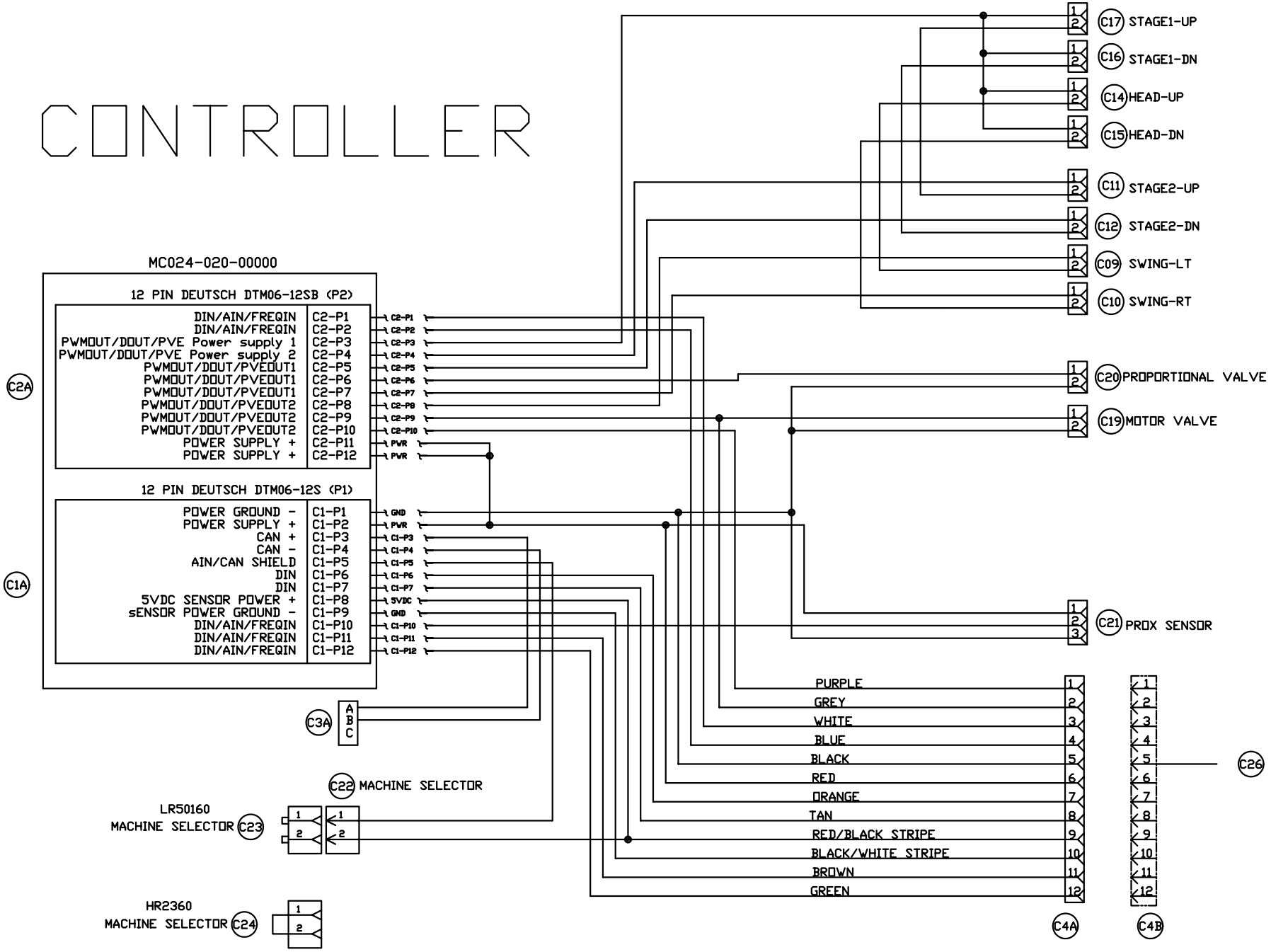

Summary of Specifications

Model	HR2360
Approximate Weight (lbs.)	3,900 - Ready To Mow
Blade Tip Speed (ft/min)	800 PTO RPM – 15,200 ft/min
	1000 PTO RPM – 19,000 ft/min (Max.)
Blades	5/8” Free Swinging
Cutting Capacity / Suggested Usage	Grass, Heavy Brush Up To 6” In Diameter
Cutting Width	60”
Deck Height	12”
Deck Thickness	7 Gauge
Driveline	Category 4
Driveline Protection	Hydraulic Relief Valve
Hitch	Standard Hitch, Category 3 Quick Hitch
Motor	Hydraulic Vane Motor
Overall Length	340”
Overall Width	86”
Transport Width	92”
PTO Operating Speed	800 to 1000 RPM
Pump	Hydraulic Spring Loaded Vane Pump
Rubber Shielding	Standard – Front & Rear
Skids	Standard – Weld On
Tractor Weight Required	15,500 lbs. And Up
Tractor HP Required	150 And Up
Hydraulic Oil System Capacity	55 Gallons
Controls	Tethered/Pendant Joystick Grip

NOTES:

DWG. NO.	25550	REV.	L

REV	CHANGE	BY	DATE	ECN
IR	INITIAL RELEASE	KHN	12/21/06	---
J	Re-Drawn In Creo 2.0	TBB	8/17/13	1556
K	16654 Replaces 16252 (1st Stage Cylinder)	TBB	6/24/14	1553
K	26765 Replaces 26758 (Blade Holder)	TBB	6/24/14	1562
L	Stand Weldment Replaced (23160 was 23038)	TBB	1/14/16	1620

Item	Part Number	Qty.	Description
1	10002	2	Hex Bolt, 1/4"-20 X 1" Gr.5 Plated
2	10006	6	Hex Bolt 1/4" x 3" gr.5 plated
3	10031	3	Hex Bolt 3/8 x 1 gr.5 plated
4	10032	3	Hex Bolt 3/8 x 1-1/2 gr.5 plated
5	10033	1	Hex Bolt 3/8" x 2-1/2" gr.5 plated
6	10041	2	HEX BOLT (3/8" X 6" GR. 5 PLATED)
7	10071	6	Hex Bolt 1/2 x 1 gr.5 plated
8	10072	2	Hex Bolt 1/2 x 1 1/2 gr.5 plated
9	10074	4	Hex Bolt 1/2 x 2-1/2 gr.5 plated
10	10092	2	Hex Bolt 5/8 x 2 gr.5 plated
11	10093	2	Hex Bolt 5/8" x 2-1/2" gr.5 plated
12	10111	4	Hex Bolt 3/4"-10 X 2" gr.5 Plated
13	10135	2	HEX BOLT(M6x1x20MM GR.5 ZINC)
14	10153	8	Lock Nut, 1/4" Plated
15	10154	1	Lock Nut 5/16"-18 Plated
16	10166	8	Lock Nut 5/8"-11 plated
17	10168	4	3/4"-10 Locknut (Gr.5 Plated)
18	10175	6	3/8"-16 Locknut (Gr.5 Plated)
19	10176	12	1/2" Locknut (Gr.5 Plated)
20	10181	1	Lockwasher 5/16" plated
21	10184	4	Lockwasher 1/2 plated
22	10185	4	Lockwasher 5/8" Plated
23	10186	4	Lockwasher 3/4" Plated
24	10200	8	1/4" Plated Flatwasher
25	10202	11	3/8" Flatwasher (Plated)
26	10204	14	1/2 Flatwasher (Plated)
27	10206	8	Flatwasher 3/4 plated
28	10207	10	Flatwasher, 1" plated
29	10252	11	Cotter Pin 3/16" X 2" Plated
30	10335	5	Hardee Red Paint - (Not Shown)
31	10336	.25	Gear Oil [85W-140] - (Not Shown)
32	10339	2	Pop Rivet
33	10346	2	3 pt. Snap Pin (Lynch Pin)
34	10368	1	1-1/4" Gate Valve
35	10373	55	Hydraulic Oil
36	10387	1	O-ring
37	10390	4	Clip Pin (1/8 x 2)
38	10393	2	Universal Clip Pin
39	10501	1	FLOW EZY BREATHER
40	10646	.2	Grease
41	10872	3	Pressure Flange SET
42	11005	1	Decal, Warning - Thrown Objects
43	11010	3	Large Hardee Logo Decal
44	11032	2	Small Hardee Logo Decal
45	11506	6	7/8" Hex Locknut
46	11508	6	Lock Washer, 7/8"
47	11675	1	Return Filter Assembly
48	11727	1	Serial Number Plate
49	11775	1	Hydraulic Pump
50	11848	1	O-Ring
51	11850	1	Web Site Decal
52	11860	10	TIE STRAP, (14" LG.) (100/PK)
53	13535	4	STAINLESS STEEL CLAMP, 1-1/2" TO 1-3/4"
54	13563	1	1-1/4"-M-NPT X 1-1/2" Metal Hose Barb
55	13632	1	1/4" NPT Metal Cap
56	13697	1	1-1/4" NPT Female Threaded Elbow
57	13758	1	20-M-NPT X 16-F-NPT Reducer
58	13778	1	1-1/4" X 3-1/2" Long NPT Nipple
59	13974	1	16-M-JIC X 16-M-NPT 90 Deg. Elbow
60	13981	8	8-M-ORB X 8-M-JIC Straight
61	15251	6	1" Hose Clamp Half
62	15255	3	Hose Clamp Cover Plate
63	15256	2	Hex Bolt (1/4" X 2-3/8" Gr. 5 Plated)
64	15338	1	Danger Decal, Exposed Blades
65	15466	1	Tubing Insert, 3-1/2" Sqr. X 11
66	15845	1	Hydraulic Decal Kit
67	15852	2	Red Reflector Decal
68	15853	2	Yellow Reflector Decal
69	15854	1	Manual Holder
70	15860	2	U-Nut, 1/4"-20
71	15893	3	SIDE MODEL DECAL FOR HR2360
72	15899	1	Tubing Insert, 4" Sqr. X 11
73	15910	46	HOSE SLEEVE
74	15927	2	Cylinder, 3"X 18" With 1-1/4" Rod & 1" Pins
75	15928	1	Cylinder, 4" X 24" W/ 2" Rod & 1" Pins
76	15929	1	2ND STG HOSE
77	15931	1	DECK HOSE
78	15932	1	2ND STG HOSE
79	15934	1	SWING HOSE
80	15935	1	SWING HOSE
81	15936	1	1ST STG HOSE
82	15937	1	1ST STG HOSE
83	16041	2	PIN, Bent, (1/2"Dia. X 8" LG.)
84	16042	1	Sight Gauge 10"
85	16060	1	HYDRAULIC MOTOR
86	16065	1	CONTROL VALVE & Joy Stick Kit
87	16066	1	DECK HOSE
88	16067	1	PUMP - VALVE HOSE
89	16068	1	HOSE ASSY. VALVE TO TANK
90	16077	3	Straight Fitting - 1"
91	16081	8	Connector - 1/2" Male
92	16082	16	Swivel Nut Elbow - 1/2" 90 Deg.
93	16084	2	Swivel Nut Run Tee - 37 Deg. Flare
94	16138	2	Lock Nut 7/16"-14 NC with Nylon Insert
95	16160	1	HOUSING, Hydraulic Motor, MDH-100
96	16174	1	HEX LOCKNUT, NYLON INSERT, 1-1/2"- 6NC
97	16179	1	SPRING LOCKWASHER, 1-1/2" DIA
98	16191	2	16-M-JIC X 16-M-NPT 90 Deg. Elbow
99	16195	1	Cotter Pin 3/16" X 2" Plated
100	16209	1	Hex Slotted Nut - 1-3/4"-12UN
101	16272	1	LOCKWASHER, 1-1/4", ZINC FINISH
102	16273	1	HEX LOCKNUT, NYLON INSERT, 1-1/4"
103	16278	1	Joystick Assembly (Not Shown)
104	16335	1	Hour Meter - not for resale
105	16353	2	16 M-JIC - 12 MORB Elbow
106	16354	1	Fitting, 16-M-ORB/16-F-JIC0
107	16379	1	HYDRAULIC HOSE, 1" - OIL
108	16390	1	HYD. HOSE, 1" 5 PSI RELIEF - OIL FILTER
109	16399	1	Spiral Guard for 1/2" Hose
110	16404	1	CHECK VALVE- INLINE 5 PSI
111	16431	1	WIRING HARNESS, Oil Cooler
112	16436	1	Clamp, 1/2" Plated Steel Loom
113	16568	2	BOTTOM HITCH PIN FOR HYD, CAT 3
114	16617	1	OIL COOLER
115	16618	1	TEMPERATURE SWITCH
116	16641	1	Hydraulic hose-return-valve end
117	16642	1	HOSE - RETURN - MOTOR END
118	16643	1	HOSE - PRESSURE - VELVE END
119	16644	1	Hydraulic Hose - Motor End
120	16646	1	CAUTION DECAL:CHECK BLADE BOLTS
121	16654	1	WELDED CYLINDER, 4 x 30, FOR HR2360
122	20031	1	Access Cover
123	22710	1	Short Belting Flat
124	22833	1	Fluid Connector
125	23130	1	Pivot Sleeve
126	23131	1	End Cap Weldment
127	23160	2	Stand Weldment, 17-7/8" Tall
128	23290	2	WELDMENT, Boom to Deck Bracket, 21"
129	23320	1	Cylinder Mount Weldment
130	23345	1	Head Mounting Bracket Weldment
131	23361	2	Spacer, 1" X 2-1/8"
132	23363	2	SPACER (1" SCH 40 Pipe x 5/8")
133	23380	1	WELDMENT, 1" x 6 1/4" PIN
134	25571	1	SUCTION HOSE
135	25574	1	ASSEMBLY, Hitch Frame, HR2360
136	25580	1	WELDMENT, BOOM, 1ST STAGE, HR2360
137	25590	1	WELDMENT, Boom 2nd Stage, HR2360
138	25602	2	Spacer (1-3/4" LG.)
139	25603	2	SPACER 1/2" (2" LG.)
140	25610	2	Weldment, Boom to Deck Bracket (19'') HR 2360
141	25629	1	Brace Support 3-1/2" x 3-1/2" x 66" LG.
142	25638	3	Pin Weldment (1" x 8")
143	25645	1	WELDMENT, Pin, HR2360
144	25650	1	WELDMENT, Hose Guard, 2nd Stg , HR2360
145	25653	1	WELDMENT, Outer Hose Guard, HR2360
146	25655	1	WELDMENT,Inner Hose Guard, HR2360
147	25660	1	HR2360 BELTING EXTENSION KIT
148	25662	1	HR2360 / CM2160 Belting Kit
149	25664	1	HR2360 Front Corner Belting
150	25670	1	Weldment, Oil Tank - HR2360
151	25680	1	WELDMENT, WEIGHT BOX,
152	25686	2	WELDMENT, Stand Tube, HR2360
153	25700	1	WELDMENT, Deck, HR2360 HD
154	25723	1	PIN, 1-1/2"-6 NC Threaded - HR2360
155	25724	4	WELDMENT, Cylinder Pin
156	25725	1	WELDMENT, Hardee Logo
157	25734	1	PIN, 1-1/4"-7 NC Threaded - HR2360
158	25747	1	WELDMENT, Pin, HR2360
159	25749	1	SPACER
160	25780	1	WELDMENT, Cylinder Breakaway, HR2360
161	25781	1	WELDMENT, Pin, High Strength, HR2360
162	25786	1	WELDMENT, PIN, 1sr Stage, HR2360
163	25857	1	WELDMENT-OIL COOLER SUPPORT
164	26765	1	Blade Holder Assembly W/Blades - Square Holes
165	26855	1	WELDMENT - FAN GUARD FOR OIL COOLER

Note:
This list of components is strictly to be viewed as a "BILL OF MATERIALS" of the "COMPLETE" mower. It is not related to any illustration.

All Dimensions in Inches Unless Otherwise Specified
Dimensions in [ ] are in Millimeters
Tolerance Unless Otherwise Specified
Fractional Dimensions ± 1/16" **Angular Dimensions ± 1°**
Decimal Dim. to Limits Shown All Holes to be +0 -1/32"

MODELED BY	TBB	8/17/13	HARDEE BY EVH MFG. CO. LORIS S.C.
DRAWN BY	KHN	12/21/06	
MATERIAL	R.M.N. N/A		DESCRIPTION: HR2360 COMPLETE ASSEMBLY
Manufactured By: EVH Mfg. Co., LLC			SHEET 1 of 11
DO NOT SCALE	B DWG SIZE	DWG. NO.	25550

DWG. NO.	25550	REV.	L

REV	CHANGE	BY	DATE	ECN
IR	INITIAL RELEASE	KHN	12/21/06	---
J	Re-Drawn In Creo 2.0	TBB	8/17/13	1556
K	16654 Replaces 16252 (1st Stage Cylinder)	TBB	6/24/14	1553
K	26765 Replaces 26758 (Blade Holder)	TBB	6/24/14	1562
L	Stand Weldment Replaced (23160 was 23038)	TBB	1/14/16	1620

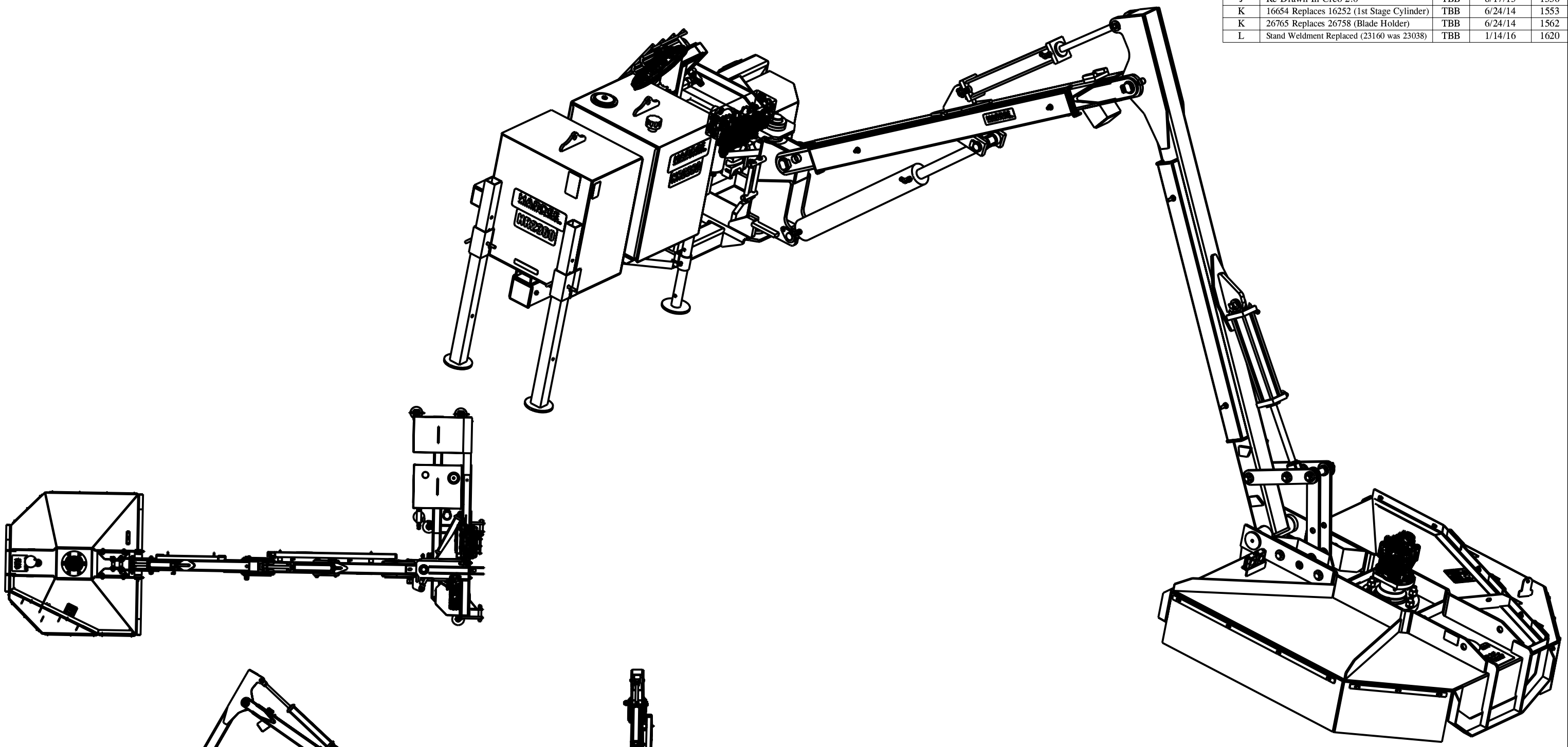

All Dimensions in Inches Unless Otherwise Specified
Dimensions in [ ] are in Millimeters
Tolerance Unless Otherwise Specified
Fractional Dimensions ± 1/16" **Angular Dimensions** ± 1°
Decimal Dim. to Limits Shown All Holes to be +0 -1/32"

MODELED BY	TBB	8/17/13	HARDEE BY EVH MFG. CO. LORIS S.C.
DRAWN BY	KHN	12/21/06	
MATERIAL	R.M.N. N/A		DESCRIPTION: HR2360 COMPLETE ASSEMBLY
Manufactured By: EVH Mfg. Co., LLC			SHEET 2 of 11
DO NOT SCALE	B DWG SIZE	DWG. NO.	25550

Item	Part Number	Qty.	Description
1	10006	4	Hex Bolt 1/4" x 3" gr.5 plated
2	10032	2	Hex Bolt 3/8 x 1-1/2 gr.5 plated
3	10071	2	Hex Bolt 1/2 x 1 gr.5 plated
4	10074	4	Hex Bolt 1/2 x 2-1/2 gr.5 plated
5	10093	2	Hex Bolt 5/8" x 2-1/2" gr.5 plated
6	10111	4	Hex Bolt 3/4"-10 X 2" gr.5 Plated
7	10153	4	Lock Nut, 1/4" Plated
8	10154	1	Lock Nut 5/16"-18 Plated
9	10166	2	Lock Nut 5/8"-11 plated
10	10168	4	3/4"-10 Locknut (Gr.5 Plated)
11	10175	2	3/8"-16 Locknut (Gr.5 Plated)
12	10176	6	1/2" Locknut (Gr.5 Plated)
13	10181	1	Lockwasher 5/16" plated
14	10184	4	Lockwasher 1/2 plated
15	10185	2	Lockwasher 5/8" Plated
16	10186	4	Lockwasher 3/4" Plated
17	10202	2	3/8" Flatwasher (Plated)
18	10204	4	1/2 Flatwasher (Plated)
19	10206	8	Flatwasher 3/4 plated
20	10335	1	Hardee Red Paint - (Not Shown)
21	10336	1	Gear Oil [85W-140] - (Not Shown)
22	10373	1	Hydraulic Oil
23	10872	2	Pressure Flange SET
24	11506	6	7/8" Hex Locknut
25	11508	6	Lock Washer, 7/8"
26	11848	1	O-Ring
27	15251	4	1" Hose Clamp Half
28	15255	2	Hose Clamp Cover Plate
29	15338	1	Danger Decal, Exposed Blades
30	15845	1	Hydraulic Decal Kit
31	15852	1	Red Reflector Decal
32	15853	1	Yellow Reflector Decal
33	15929	1	2ND STG HOSE
34	15931	1	DECK HOSE
35	15932	1	2ND STG HOSE
36	15934	1	SWING HOSE
37	15935	1	SWING HOSE
38	15936	1	1ST STG HOSE
39	15937	1	1ST STG HOSE
40	16060	1	HYDRAULIC MOTOR
41	16066	1	DECK HOSE
42	16067	1	PUMP - VALVE HOSE
43	16068	1	HOSE ASSY. VALVE TO TANK
44	16160	1	HOUSING, Hydraulic Motor, MDH-100
45	16195	1	Cotter Pin 3/16" X 2" Plated
46	16209	1	Hex Slotted Nut - 1-3/4"-12UN
47	16641	1	Hydraulic hose-return-valve end
48	16642	1	HOSE - RETURN - MOTOR END
49	16643	1	HOSE - PRESSURE - VELVE END
50	16644	1	Hydraulic Hose - Motor End
51	16646	1	CAUTION DECAL:CHECK BLADE BOLTS
52	20031	1	Access Cover
53	22710	1	Short Belting Flat
54	23131	1	End Cap Weldment
55	23320	1	Cylinder Mount Weldment
56	23345	1	Head Mounting Bracket Weldment
57	25571	1	SUCTION HOSE
58	25660	1	HR2360 BELTING EXTENSION KIT
59	25662	1	HR2360 / CM2160 Belting Kit
60	25664	1	HR2360 Front Corner Belting
61	25700	1	WELDMENT, Deck, HR2360 HD
62	26765	1	Blade Holder Assembly W/Blades - Square Holes

DWG. NO.	25550	REV.	L

REV	CHANGE	BY	DATE	ECN
IR	INITIAL RELEASE	KHN	12/21/06	---
J	Re-Drawn In Creo 2.0	TBB	8/17/13	1556
K	16654 Replaces 16252 (1st Stage Cylinder)	TBB	6/24/14	1553
K	26765 Replaces 26758 (Blade Holder)	TBB	6/24/14	1562
L	Stand Weldment Replaced (23160 was 23038)	TBB	1/14/16	1620

Belting, Hinge Gate & Motor, Blade Holder

All Dimensions in Inches Unless Otherwise Specified
Dimensions in [ ] are in Millimeters

Tolerance Unless Otherwise Specified

Fractional Dimensions ± 1/16" — Decimal Dim. to Limits Shown

Angular Dimensions ± 1° — All Holes to be +0 -1/32"

MODELED BY	TBB	8/17/13
DRAWN BY	KHN	12/21/06
MATERIAL	R.M.N.	N/A

Manufactured By:
EVH Mfg. Co., LLC

HARDEE BY
EVH MFG. CO.
LORIS S.C.

DESCRIPTION: HR2360 COMPLETE ASSEMBLY

SHEET 3 of 11

DO NOT SCALE | A DWG SIZE | DWG. NO. 25550

DWG. NO.	25550			REV. L
REV	CHANGE	BY	DATE	ECN
IR	INITIAL RELEASE	KHN	12/21/06	---
J	Re-Drawn In Creo 2.0	TBB	8/17/13	1556
K	16654 Replaces 16252 (1st Stage Cylinder)	TBB	6/24/14	1553
K	26765 Replaces 26758 (Blade Holder)	TBB	6/24/14	1562
L	Stand Weldment Replaced (23160 was 23038)	TBB	1/14/16	1620

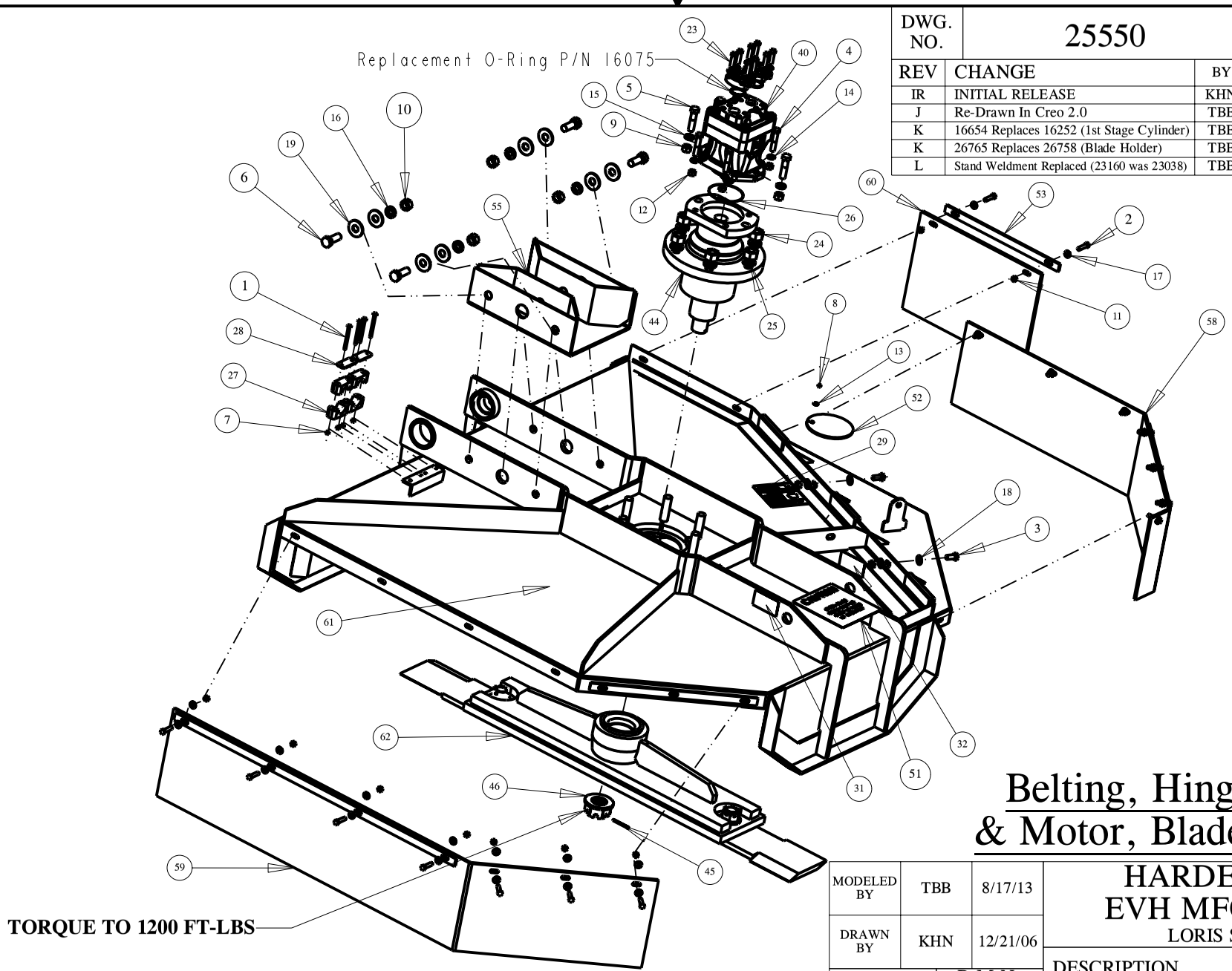

Belting, Hinge Gate & Motor, Blade Holder

MODELED BY	TBB	8/17/13	HARDEE BY EVH MFG. CO. LORIS S.C.
DRAWN BY	KHN	12/21/06	
MATERIAL	R.M.N. N/A		DESCRIPTION: HR2360 COMPLETE ASSEMBLY
			SHEET 4 of 11
Manufactured By: EVH Mfg. Co., LLC			DO NOT SCALE / A DWG SIZE / DWG. NO. 25550

All Dimensions in Inches Unless Otherwise Specified
Dimensions in [ ] are in Millimeters

Tolerance Unless Otherwise Specified

Fractional Dimensions ± 1/16" — Decimal Dim. to Limits Shown

Angular Dimensions ± 1° — All Holes to be +0 -1/32"

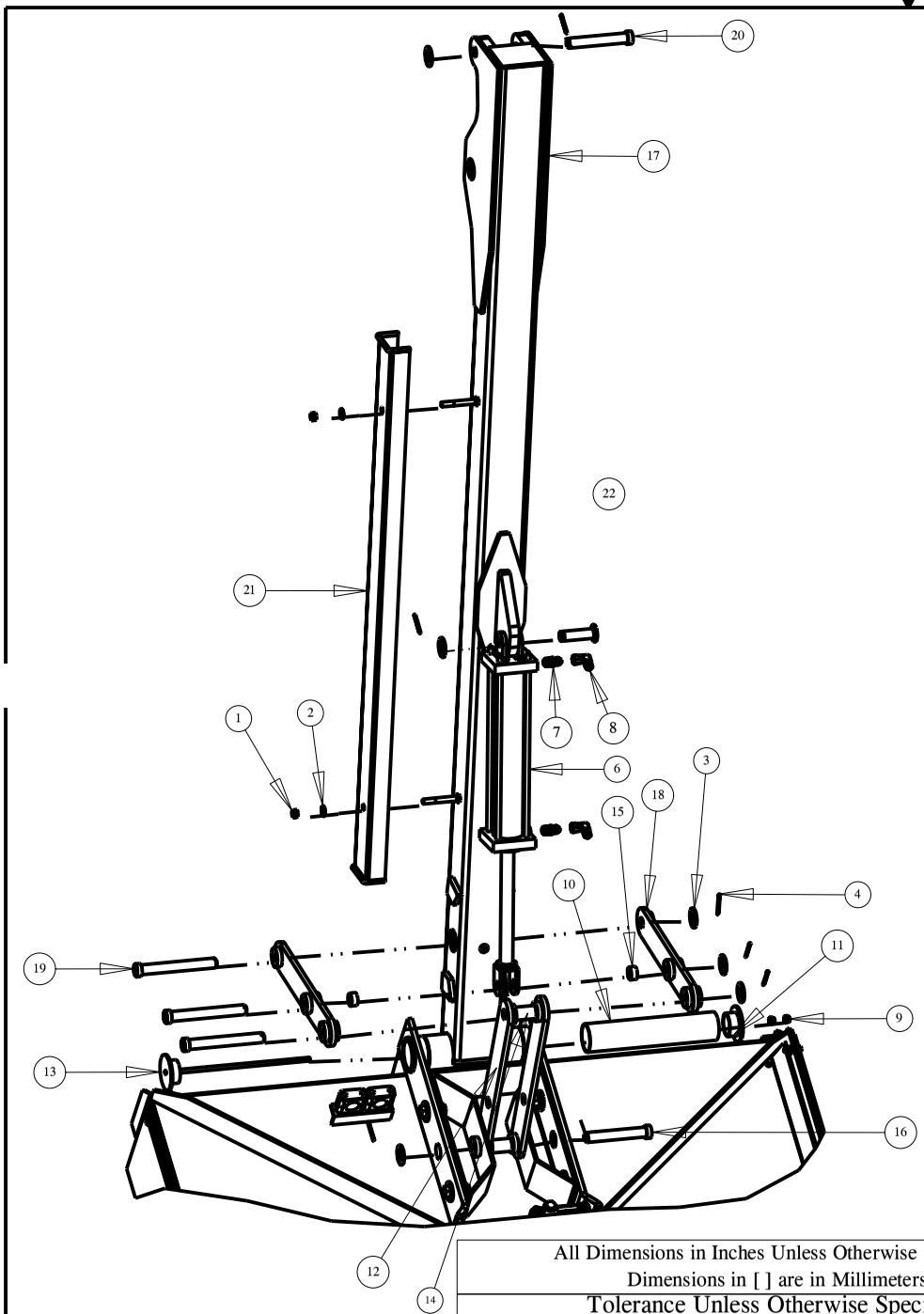

DWG. NO.	25550	REV.	L

REV	CHANGE	BY	DATE	ECN
IR	INITIAL RELEASE	KHN	12/21/06	---
J	Re-Drawn In Creo 2.0	TBB	8/17/13	1556
K	16654 Replaces 16252 (1st Stage Cylinder)	TBB	6/24/14	1553
K	26765 Replaces 26758 (Blade Holder)	TBB	6/24/14	1562
L	Stand Weldment Replaced (23160 was 23038)	TBB	1/14/16	1620

2nd Stage Boom

Item	Part Number	Qty.	Description
1	10176	2	1/2" Locknut (Gr.5 Plated)
2	10204	2	1/2 Flatwasher (Plated)
3	10207	6	Flatwasher, 1" plated
4	10252	6	Cotter Pin 3/16" X 2" Plated
5	10335	1	Hardee Red Paint - (Not Shown)
6	15927	1	Cylinder, 3"X 18" With 1-1/4" Rod & 1" Pins
7	16081	2	Connector - 1/2" Male
8	16082	2	Swivel Nut Elbow - 1/2" 90 Deg.
9	16138	2	Lock Nut 7/16"-14 NC with Nylon Insert
10	23130	1	Pivot Sleeve
11	23131	1	End Cap Weldment
12	23290	2	WELDMENT, Boom to Deck Bracket, 21"
13	23345	1	Head Mounting Bracket Weldment
14	23361	2	Spacer, 1" X 2-1/8"
15	23363	2	SPACER (1" SCH 40 Pipe x 5/8")
16	23380	1	WELDMENT, 1" x 6 1/4" PIN
17	25590	1	WELDMENT, Boom 2nd Stage, HR2360
18	25610	2	Weldment, Boom to Deck Bracket (19'') HR 2360
19	25638	3	Pin Weldment (1" x 8")
20	25645	1	WELDMENT, Pin, HR2360
21	25650	1	WELDMENT, Hose Guard, 2nd Stg , HR2360
22	25724	1	WELDMENT, Cylinder Pin

All Dimensions in Inches Unless Otherwise Specified
Dimensions in [ ] are in Millimeters

Tolerance Unless Otherwise Specified

Fractional Dimensions ± 1/16"
Decimal Dim. to Limits Shown

Angular Dimensions ± 1°
All Holes to be +0 -1/32"

MODELED BY	TBB	8/17/13
DRAWN BY	KHN	12/21/06
MATERIAL	R.M.N. N/A	

Manufactured By:
EVH Mfg. Co., LLC

HARDEE BY
EVH MFG. CO.
LORIS S.C.

DESCRIPTION: HR2360 COMPLETE ASSEMBLY

SHEET 5 of 11

DO NOT SCALE | A DWG SIZE | DWG. NO. 25550

DWG. NO.	25550	REV.	L

REV	CHANGE	BY	DATE	ECN
IR	INITIAL RELEASE	KHN	12/21/06	---
J	Re-Drawn In Creo 2.0	TBB	8/17/13	1556
K	16654 Replaces 16252 (1st Stage Cylinder)	TBB	6/24/14	1553
K	26765 Replaces 26758 (Blade Holder)	TBB	6/24/14	1562
L	Stand Weldment Replaced (23160 was 23038)	TBB	1/14/16	1620

1st Stage Boom

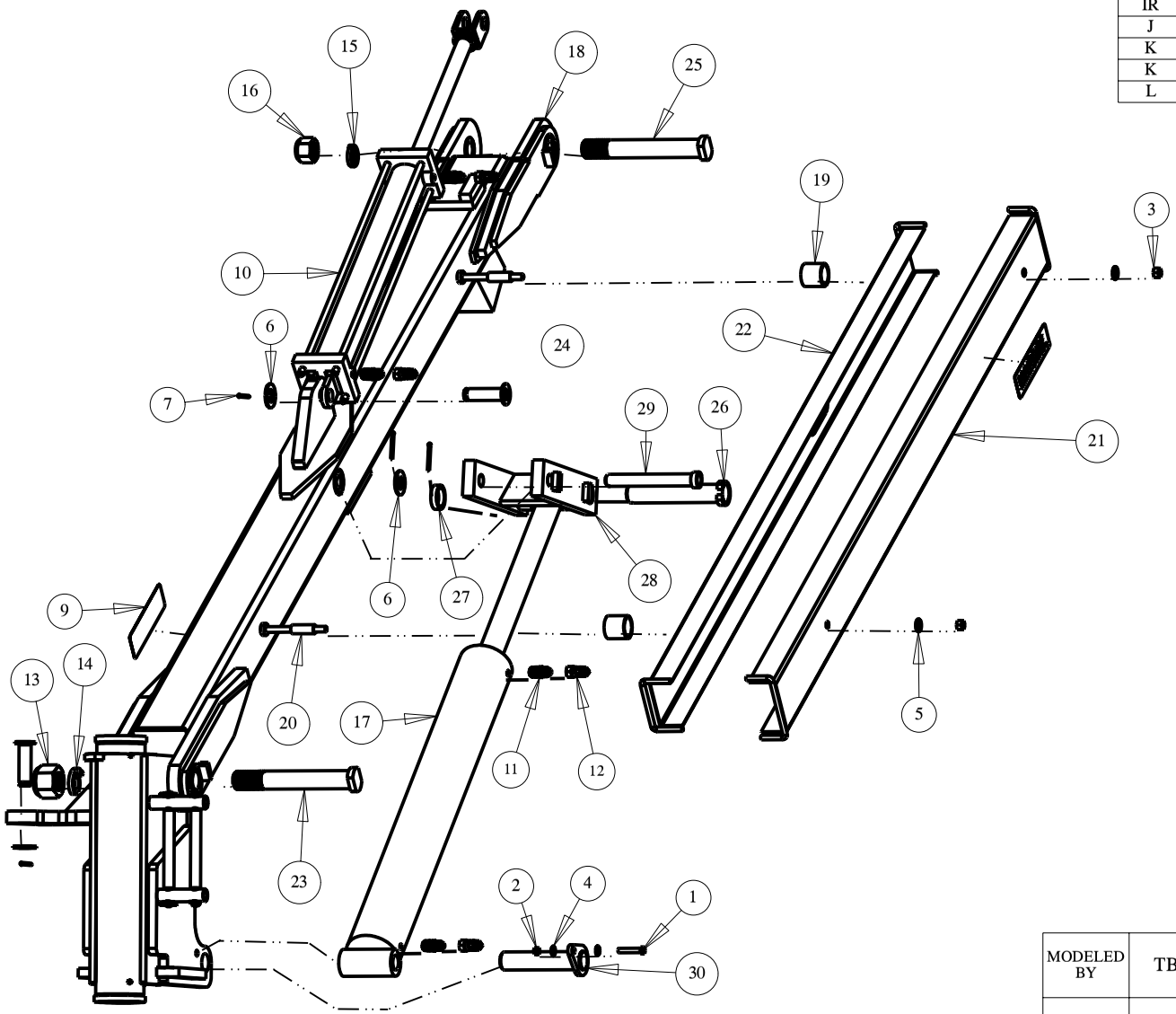

Item	Part Number	Qty.	Description
1	10033	1	Hex Bolt 3/8" x 2-1/2" gr.5 plated
2	10175	1	3/8"-16 Locknut (Gr.5 Plated)
3	10176	2	1/2" Locknut (Gr.5 Plated)
4	10202	2	3/8" Flatwasher (Plated)
5	10204	2	1/2 Flatwasher (Plated)
6	10207	3	Flatwasher, 1" plated
7	10252	4	Cotter Pin 3/16" X 2" Plated
8	10335	1	Hardee Red Paint - (Not Shown)
9	11032	2	Small Hardee Logo Decal
10	15928	1	Cylinder, 4" X 24" W/ 2" Rod & 1" Pins
11	16081	4	Connector - 1/2" Male
12	16082	4	Swivel Nut Elbow - 1/2" 90 Deg.
13	16174	1	HEX LOCKNUT, NYLON INSERT, 1-1/2"- 6NC
14	16179	1	SPRING LOCKWASHER, 1-1/2" DIA
15	16272	1	LOCKWASHER, 1-1/4", ZINC FINISH
16	16273	1	HEX LOCKNUT, NYLON INSERT, 1-1/4"
17	16654	1	WELDED CYLINDER, 4 x 30, FOR HR2360
18	25580	1	WELDMENT, BOOM, 1ST STAGE, HR2360
19	25602	2	Spacer (1-3/4" LG.)
20	25603	2	SPACER 1/2" (2" LG.)
21	25653	1	WELDMENT, Outer Hose Guard, HR2360
22	25655	1	WELDMENT,Inner Hose Guard, HR2360
23	25723	1	PIN, 1-1/2"-6 NC Threaded - HR2360
24	25724	2	WELDMENT, Cylinder Pin
25	25734	1	PIN, 1-1/4"-7 NC Threaded - HR2360
26	25747	1	WELDMENT, Pin, HR2360
27	25749	1	SPACER
28	25780	1	WELDMENT, Cylinder Breakaway, HR2360
29	25781	1	WELDMENT, Pin, High Strength, HR2360
30	25786	1	WELDMENT, PIN, 1sr Stage, HR2360

All Dimensions in Inches Unless Otherwise Specified
Dimensions in [ ] are in Millimeters

Tolerance Unless Otherwise Specified

Fractional Dimensions ± 1/16" — Decimal Dim. to Limits Shown

Angular Dimensions ± 1° — All Holes to be +0 -1/32"

MODELED BY	TBB	8/17/13
DRAWN BY	KHN	12/21/06
MATERIAL	R.M.N.	N/A

Manufactured By:
EVH Mfg. Co., LLC

HARDEE BY
EVH MFG. CO.
LORIS S.C.

DESCRIPTION: HR2360 COMPLETE ASSEMBLY

SHEET 6 of 11

DO NOT SCALE | A DWG SIZE | DWG. NO. 25550

Item	Part Number	Qty.	Description
1	10002	2	Hex Bolt, 1/4"-20 X 1" Gr.5 Plated
2	10006	2	Hex Bolt 1/4" x 3" gr.5 plated
3	10031	3	Hex Bolt 3/8 x 1 gr.5 plated
4	10032	1	Hex Bolt 3/8 x 1-1/2 gr.5 plated
5	10041	2	HEX BOLT (3/8" X 6" GR. 5 PLATED)
6	10071	4	Hex Bolt 1/2 x 1 gr.5 plated
7	10072	2	Hex Bolt 1/2 x 1 1/2 gr.5 plated
8	10092	2	Hex Bolt 5/8 x 2 gr.5 plated
9	10135	2	HEX BOLT(M6x1x20MM GR.5 ZINC)
10	10153	4	Lock Nut, 1/4" Plated
11	10166	6	Lock Nut 5/8"-11 plated
12	10175	3	3/8"-16 Locknut (Gr.5 Plated)
13	10176	2	1/2" Locknut (Gr.5 Plated)
14	10185	2	Lockwasher 5/8" Plated
15	10200	8	1/4" Plated Flatwasher
16	10202	7	3/8" Flatwasher (Plated)
17	10204	6	1/2 Flatwasher (Plated)
18	10335	1	Hardee Red Paint - (Not Shown)
19	10368	1	1-1/4" Gate Valve
20	10373	1	Hydraulic Oil
21	10387	1	O-ring
22	10501	1	FLOW EZY BREATHER
23	10646	1	Grease
24	10872	1	Pressure Flange SET
25	11005	1	Decal, Warning - Thrown Objects
26	11010	3	Large Hardee Logo Decal
27	11675	1	Return Filter Assembly
28	11775	1	Hydraulic Pump
29	11850	1	Web Site Decal
30	13535	4	STAINLESS STEEL CLAMP, 1-1/2" TO 1-3/4"
31	13563	1	1-1/4"-M-NPT X 1-1/2" Metal Hose Barb
32	13632	1	1/4" NPT Metal Cap
33	13697	1	1-1/4" NPT Female Threaded Elbow
34	13758	1	20-M-NPT X 16-F-NPT Reducer
35	13778	1	1-1/4" X 3-1/2" Long NPT Nipple
36	13974	1	16-M-JIC X 16-M-NPT 90 Deg. Elbow
37	13981	8	8-M-ORB X 8-M-JIC Straight
38	15466	1	Tubing Insert, 3-1/2" Sqr. X 11
39	15845	1	Hydraulic Decal Kit
40	15852	1	Red Reflector Decal
41	15853	1	Yellow Reflector Decal
42	15854	1	Manual Holder
43	15860	2	U-Nut, 1/4"-20
44	15893	3	SIDE MODEL DECAL FOR HR2360
45	15899	1	Tubing Insert, 4" Sqr. X 11
46	16042	1	Sight Gauge 10"
47	16065	1	CONTROL VALVE & Joy Stick Kit
48	16077	3	Straight Fitting - 1"
49	16082	8	Swivel Nut Elbow - 1/2" 90 Deg.
50	16084	2	Swivel Nut Run Tee - 37 Deg. Flare
51	16191	2	16-M-JIC X 16-M-NPT 90 Deg. Elbow
52	16249	1	PROX SENSOR
53	16278	1	Joystick Assembly (Not Shown)
54	16353	2	16 M-JIC - 12 MORB Elbow
55	16354	1	Fitting, 16-M-ORB/16-F-JIC0
56	16404	1	CHECK VALVE- INLINE 5 PSI
57	16431	1	WIRING HARNESS, Oil Cooler
58	16436	1	Clamp, 1/2" Plated Steel Loom
59	16496	1	CONTROLLER, MC 024 020 for 16065
60	16617	1	OIL COOLER
61	16618	1	TEMPERATURE SWITCH
62	22833	1	Fluid Connector
63	23160	2	Stand Weldment, 17-7/8" Tall
64	25574	1	ASSEMBLY, Hitch Frame, HR2360
65	25670	1	Weldment, Oil Tank - HR2360
66	25680	1	WELDMENT, WEIGHT BOX,
67	25725	1	WELDMENT, Hardee Logo
68	25857	1	WELDMENT-OIL COOLER SUPPORT
69	26855	1	WELDMENT - FAN GUARD FOR OIL COOLER

DWG. NO.	25550	REV.	L

REV	CHANGE	BY	DATE	ECN
IR	INITIAL RELEASE	KHN	12/21/06	---
J	Re-Drawn In Creo 2.0	TBB	8/17/13	1556
K	16654 Replaces 16252 (1st Stage Cylinder)	TBB	6/24/14	1553
K	26765 Replaces 26758 (Blade Holder)	TBB	6/24/14	1562
L	Stand Weldment Replaced (23160 was 23038)	TBB	1/14/16	1620

Item	Part Number	Qty.	Description
A	10366	1	Suction Strainer (100Mesh)
B	10502	1	6" RESERVOIR COVER COMPLETE
C	10510	1	FILTER INDICATOR
D	11767	1	REPLACEMENT (Spin On Filter for 11675)

Hitch Frame & Components

All Dimensions in Inches Unless Otherwise Specified
Dimensions in [ ] are in Millimeters

Tolerance Unless Otherwise Specified

Fractional Dimensions ± 1/16" — Decimal Dim. to Limits Shown

Angular Dimensions ± 1° — All Holes to be +0 -1/32"

MODELED BY	TBB	8/17/13
DRAWN BY	KHN	12/21/06
MATERIAL	R.M.N.	N/A

Manufactured By:
EVH Mfg. Co., LLC

HARDEE BY
EVH MFG. CO.
LORIS S.C.

DESCRIPTION: HR2360 COMPLETE ASSEMBLY

SHEET 7 of 11

DO NOT SCALE | A DWG SIZE | DWG. NO. 25550

DWG. NO.	25550	REV.	L

REV	CHANGE	BY	DATE	ECN
IR	INITIAL RELEASE	KHN	12/21/06	---
J	Re-Drawn In Creo 2.0	TBB	8/17/13	1556
K	16654 Replaces 16252 (1st Stage Cylinder)	TBB	6/24/14	1553
K	26765 Replaces 26758 (Blade Holder)	TBB	6/24/14	1562
L	Stand Weldment Replaced (23160 was 23038)	TBB	1/14/16	1620

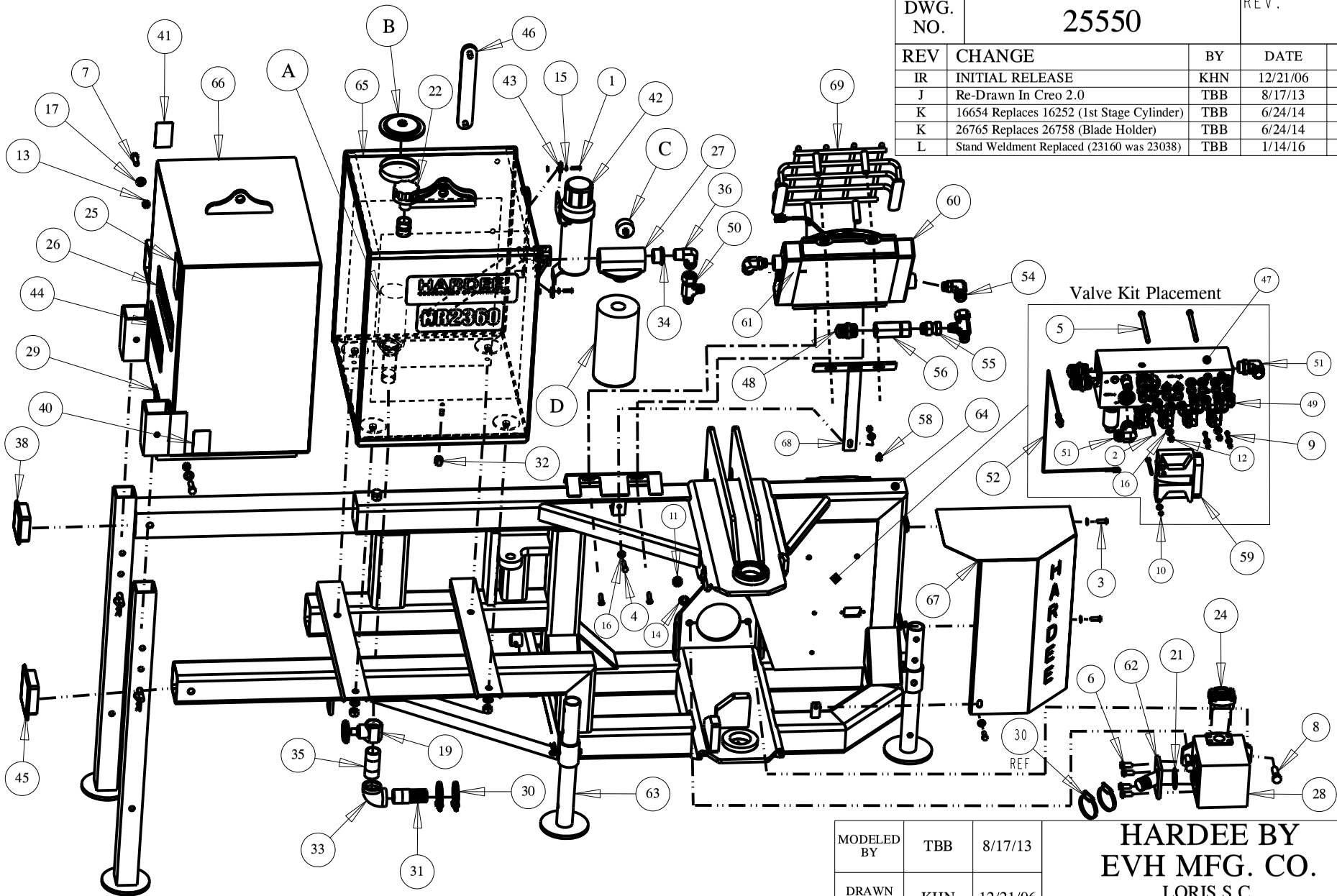

Hitch Frame & Components

All Dimensions in Inches Unless Otherwise Specified
Dimensions in [ ] are in Millimeters
Tolerance Unless Otherwise Specified
Fractional Dimensions ± 1/16"
Decimal Dim. to Limits Shown
Angular Dimensions ± 1°
All Holes to be +0 -1/32"

MODELED BY	TBB	8/17/13
DRAWN BY	KHN	12/21/06
MATERIAL	R.M.N.	N/A

Manufactured By:
EVH Mfg. Co., LLC

HARDEE BY
EVH MFG. CO.
LORIS S.C.

DESCRIPTION: HR2360 COMPLETE ASSEMBLY

SHEET 8 of 11

DO NOT SCALE | A (DWG SIZE) | DWG. NO. 25550

Item	Part Number	Qty.	Description
1	10207	2	Flatwasher, 1" plated
2	10252	2	Cotter Pin 3/16" X 2" Plated
3	10335	1	Hardee Red Paint - (Not Shown)
4	10346	2	3 pt. Snap Pin (Lynch Pin)
5	10390	4	Clip Pin (1/8 x 2)
6	10393	2	Universal Clip Pin
7	15251	2	1" Hose Clamp Half
8	15255	1	Hose Clamp Cover Plate
9	15256	2	Hex Bolt (1/4" X 2-3/8" Gr. 5 Plated)
10	15466	1	Tubing Insert, 3-1/2" Sqr. X 11
11	15899	1	Tubing Insert, 4" Sqr. X 11
12	15927	1	Cylinder, 3"X 18" With 1-1/4" Rod & 1" Pins
13	16041	2	PIN, Bent, (1/2"Dia. X 8" LG.)
14	16081	2	Connector - 1/2" Male
15	16082	2	Swivel Nut Elbow - 1/2" 90 Deg.
16	16568	2	BOTTOM HITCH PIN FOR HYD, CAT 3
17	23160	2	Stand Weldment, 17-7/8" Tall
18	25574	1	ASSEMBLY, Hitch Frame, HR2360
19	25629	1	Brace Support 3-1/2" x 3-1/2" x 66" LG.
20	25686	2	WELDMENT, Stand Tube, HR2360
21	25724	2	WELDMENT, Cylinder Pin

Item	Part Number	Qty.	Description
A	10091	1	HEX BOLT 5/8" X 1-1/2" GR. 5 PLATED
B	23284	1	WELDMENT, Swing arm shaft
C	25785	1	SWIVEL WELDMENT HR2360
D	10215	1	FLAT WASHER (1-1/2") USS Plain Zinc
E	16294	1	LOCKNUT, 1-1/2"-12 Zinc Plated Nylon Insert Jam
F	23273	2	Hose Bracket Rod
G	23272	2	HOSE BRACKET ROLLER
H	10204	4	FLAT WASHER, 1/2" Plated, USS
I	10237	4	COTTER PIN (1/8" X 1-1/4" PLATED)
J	23257	1	WELD IN BUSHING W/ GREASE FITTING
K	23258	1	WELD IN BUSHING, 4-1/4" OD X 7/8" LG.
L	23268	2	WELD IN BUSHING W/ GREASE FITTING

DWG. NO.	25550	REV.	L

REV	CHANGE	BY	DATE	ECN
IR	INITIAL RELEASE	KHN	12/21/06	---
J	Re-Drawn In Creo 2.0	TBB	8/17/13	1556
K	16654 Replaces 16252 (1st Stage Cylinder)	TBB	6/24/14	1553
K	26765 Replaces 26758 (Blade Holder)	TBB	6/24/14	1562
L	Stand Weldment Replaced (23160 was 23038)	TBB	1/14/16	1620

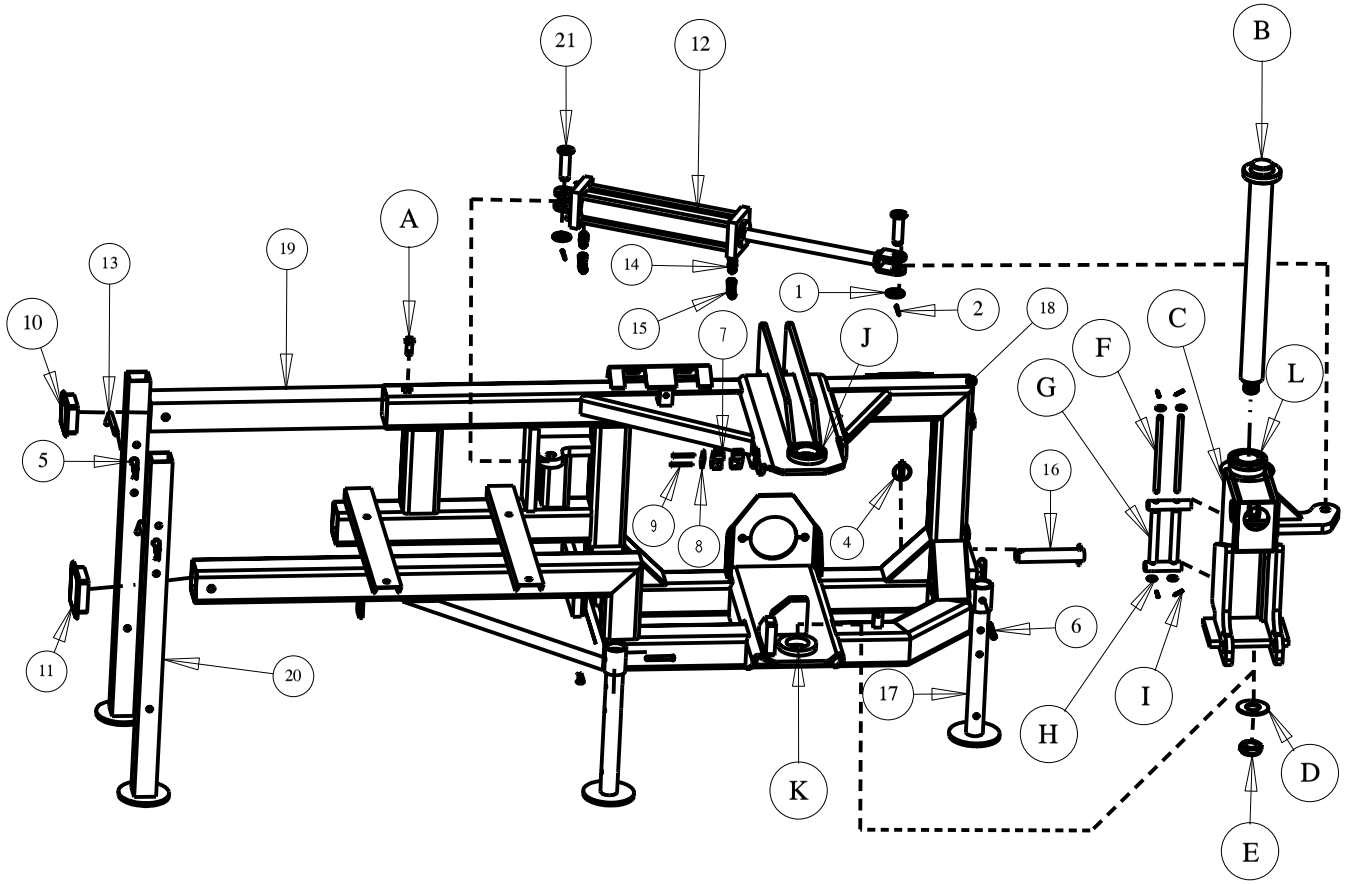

Hitch Frame & Swivel

All Dimensions in Inches Unless Otherwise Specified
Dimensions in [ ] are in Millimeters

Tolerance Unless Otherwise Specified

Fractional Dimensions ± 1/16" — Decimal Dim. to Limits Shown

Angular Dimensions ± 1° — All Holes to be +0 -1/32"

MODELED BY	TBB	8/17/13
DRAWN BY	KHN	12/21/06
MATERIAL	R.M.N.	N/A

Manufactured By:
EVH Mfg. Co., LLC

HARDEE BY EVH MFG. CO.

LORIS S.C.

DESCRIPTION: HR2360 COMPLETE ASSEMBLY

SHEET 9 of 11

DO NOT SCALE | A DWG SIZE | DWG. NO. 25550

NOTES:

Hydraulic Schematic For HR2360

DWG. NO.	25550	REV.	L

REV	CHANGE	BY	DATE	ECN
IR	INITIAL RELEASE	KHN	12/21/06	---
J	Re-Drawn In Creo 2.0	TBB	8/17/13	1556
K	16654 Replaces 16252 (1st Stage Cylinder)	TBB	6/24/14	1553
K	26765 Replaces 26758 (Blade Holder)	TBB	6/24/14	1562
L	Stand Weldment Replaced (23160 was 23038)	TBB	1/14/16	1620

Item	Part Number	Qty.	Description
1	10071	4	Hex Bolt 1/2 x 1 gr.5 plated
2	10092	2	Hex Bolt 5/8 x 2 gr.5 plated
3	10166	2	Lock Nut 5/8"-11 plated
4	10185	2	Lockwasher 5/8" Plated
5	10336	1	Gear Oil [85W-140] - (Not Shown)
6	10368	1	1-1/4" Gate Valve
7	10373	1	Hydraulic Oil
8	10387	1	O-ring
9	10872	3	Pressure Flange SET
10	11675	1	Return Filter Assembly
11	11775	1	Hydraulic Pump
12	13535	4	STAINLESS STEEL CLAMP, 1-1/2" TO 1-3/4"
13	13563	1	1-1/4"-M-NPT X 1-1/2" Metal Hose Barb
14	13697	1	1-1/4" NPT Female Threaded Elbow
15	13758	1	20-M-NPT X 16-F-NPT Reducer
16	13778	1	1-1/4" X 3-1/2" Long NPT Nipple
17	13974	1	16-M-JIC X 16-M-NPT 90 Deg. Elbow
18	13981	8	8-M-ORB X 8-M-JIC Straight
19	15910	46	HOSE SLEEVE
20	15927	2	Cylinder, 3"X 18" With 1-1/4" Rod & 1" Pins
21	15928	1	Cylinder, 4" X 24" W/ 2" Rod & 1" Pins
22	15929	1	2ND STG HOSE
23	15931	1	DECK HOSE
24	15932	1	2ND STG HOSE
25	15934	1	SWING HOSE
26	15935	1	SWING HOSE
27	15936	1	1ST STG HOSE
28	15937	1	1ST STG HOSE
29	16060	1	HYDRAULIC MOTOR
30	16065	1	CONTROL VALVE & Joy Stick Kit
31	16066	1	DECK HOSE
32	16067	1	PUMP - VALVE HOSE
33	16068	1	HOSE ASSY. VALVE TO TANK
34	16077	3	Straight Fitting - 1"
35	16081	8	Connector - 1/2" Male
36	16082	16	Swivel Nut Elbow - 1/2" 90 Deg.
37	16084	2	Swivel Nut Run Tee - 37 Deg. Flare
38	16191	2	16-M-JIC X 16-M-NPT 90 Deg. Elbow
39	16278	1	Joystick Assembly (Not Shown)
40	16353	2	16 M-JIC - 12 MORB Elbow
41	16354	1	Fitting, 16-M-ORB/16-F-JIC0
42	16379	1	HYDRAULIC HOSE, 1" - OIL
43	16390	1	HYD. HOSE, 1" 5 PSI RELIEF - OIL FILTER
44	16399	1	Spiral Guard for 1/2" Hose
45	16404	1	CHECK VALVE- INLINE 5 PSI
46	16431	1	WIRING HARNESS, Oil Cooler
47	16617	1	OIL COOLER
48	16618	1	TEMPERATURE SWITCH
49	16641	1	Hydraulic hose-return-valve end
50	16642	1	HOSE - RETURN - MOTOR END
51	16643	1	HOSE - PRESSURE - VELVE END
52	16644	1	Hydraulic Hose - Motor End
53	16654	1	WELDED CYLINDER, 4 x 30, FOR HR2360
54	22833	1	Fluid Connector
55	25571	1	SUCTION HOSE

All Dimensions in Inches Unless Otherwise Specified
Dimensions in [ ] are in Millimeters
Tolerance Unless Otherwise Specified
Fractional Dimensions ± 1/16" **Angular Dimensions ± 1°**
Decimal Dim. to Limits Shown All Holes to be +0 -1/32"

MODELED BY	TBB	8/17/13
DRAWN BY	KHN	8/17/13
MATERIAL	R.M.N. N/A	

Manufactured By:
EVH Mfg. Co., LLC

HARDEE BY
EVH MFG. CO.
LORIS S.C.

DESCRIPTION: HR2360 COMPLETE ASSEMBLY

SHEET 10 of 11

DO NOT SCALE | B DWG SIZE | DWG. NO. 25550

Hydraulic Schematic For HR2360

DWG. NO.	25550	REV.	L

REV	CHANGE	BY	DATE	ECN
IR	INITIAL RELEASE	KHN	12/21/06	---
J	Re-Drawn In Creo 2.0	TBB	8/17/13	1556
K	16654 Replaces 16252 (1st Stage Cylinder)	TBB	6/24/14	1553
K	26765 Replaces 26758 (Blade Holder)	TBB	6/24/14	1562
L	Stand Weldment Replaced (23160 was 23038)	TBB	1/14/16	1620

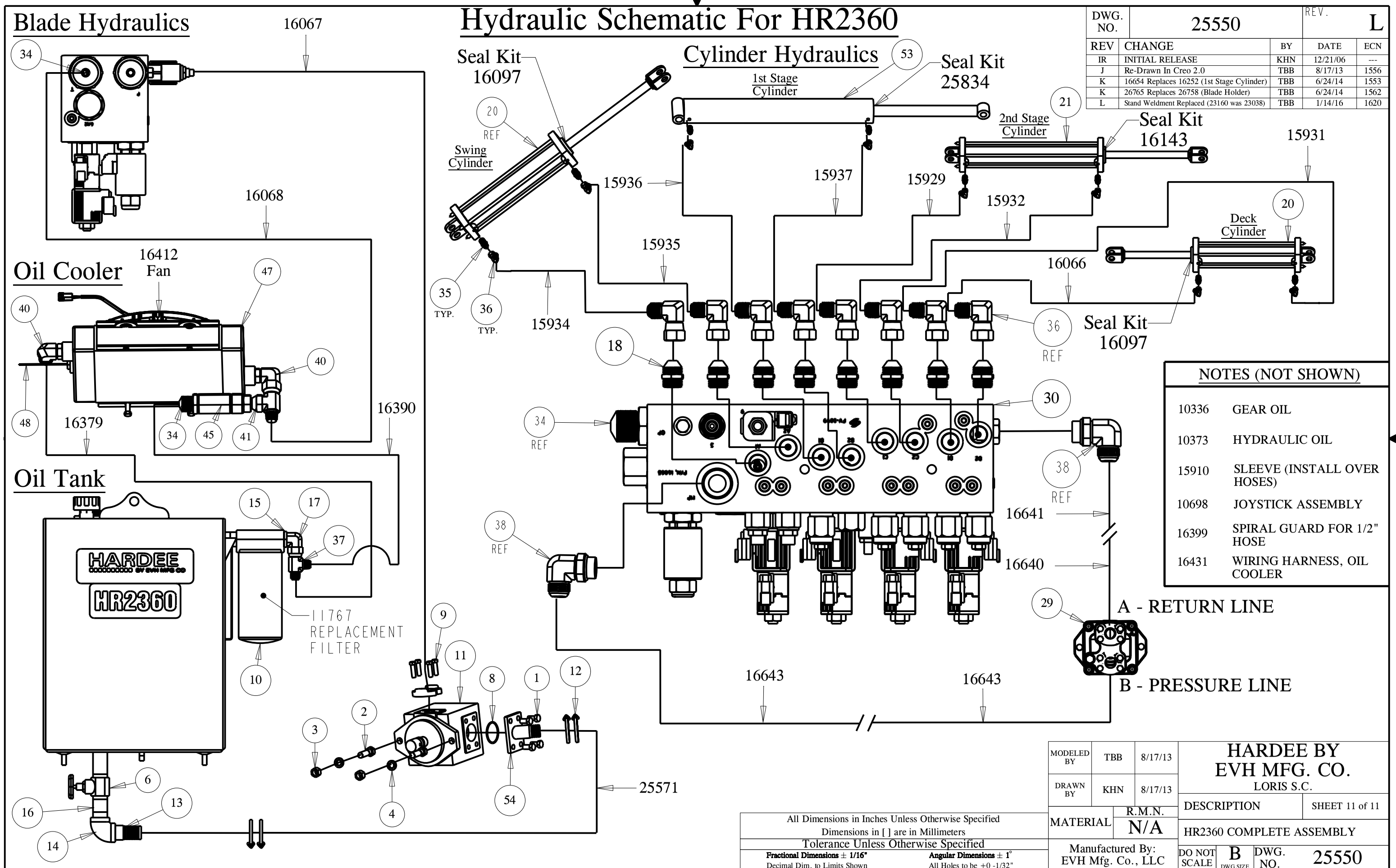

NOTES (NOT SHOWN)

10336	GEAR OIL
10373	HYDRAULIC OIL
15910	SLEEVE (INSTALL OVER HOSES)
10698	JOYSTICK ASSEMBLY
16399	SPIRAL GUARD FOR 1/2" HOSE
16431	WIRING HARNESS, OIL COOLER

All Dimensions in Inches Unless Otherwise Specified
Dimensions in [ ] are in Millimeters
Tolerance Unless Otherwise Specified
Fractional Dimensions ± 1/16" — Angular Dimensions ± 1°
Decimal Dim. to Limits Shown — All Holes to be +0 -1/32"

MODELED BY	TBB	8/17/13
DRAWN BY	KHN	8/17/13
MATERIAL	R.M.N.	N/A

Manufactured By: EVH Mfg. Co., LLC

HARDEE BY EVH MFG. CO.
LORIS S.C.

DESCRIPTION: HR2360 COMPLETE ASSEMBLY
SHEET 11 of 11
DO NOT SCALE — B DWG SIZE — DWG. NO. 25550

Item	Part Number	Qty.	Description
1	16671	2	Blade Bolt(sq) for 5/8" Thick Blades
2	16672	2	HEX NUT, Slotted, 1-1/4"-12
3	16673	2	1/4"-Coiled Spring Pin-HD
4	16674	2	1 1/4", Flat Washer, Thur-Hardend High Strength, SAE , Yellow Zinc
5	16675	2	BLADE,5/8"X 6"X15" FLAT BLADE
6	26766	1	WELDMENT- BLADE HOLDER(SQ)- CM2160

DWG. NO.	26765		REV. 1R	
REV	CHANGE	BY	DATE	ECN
1R	INITIAL RELEASE	C.K.N.	3/31/14	1562

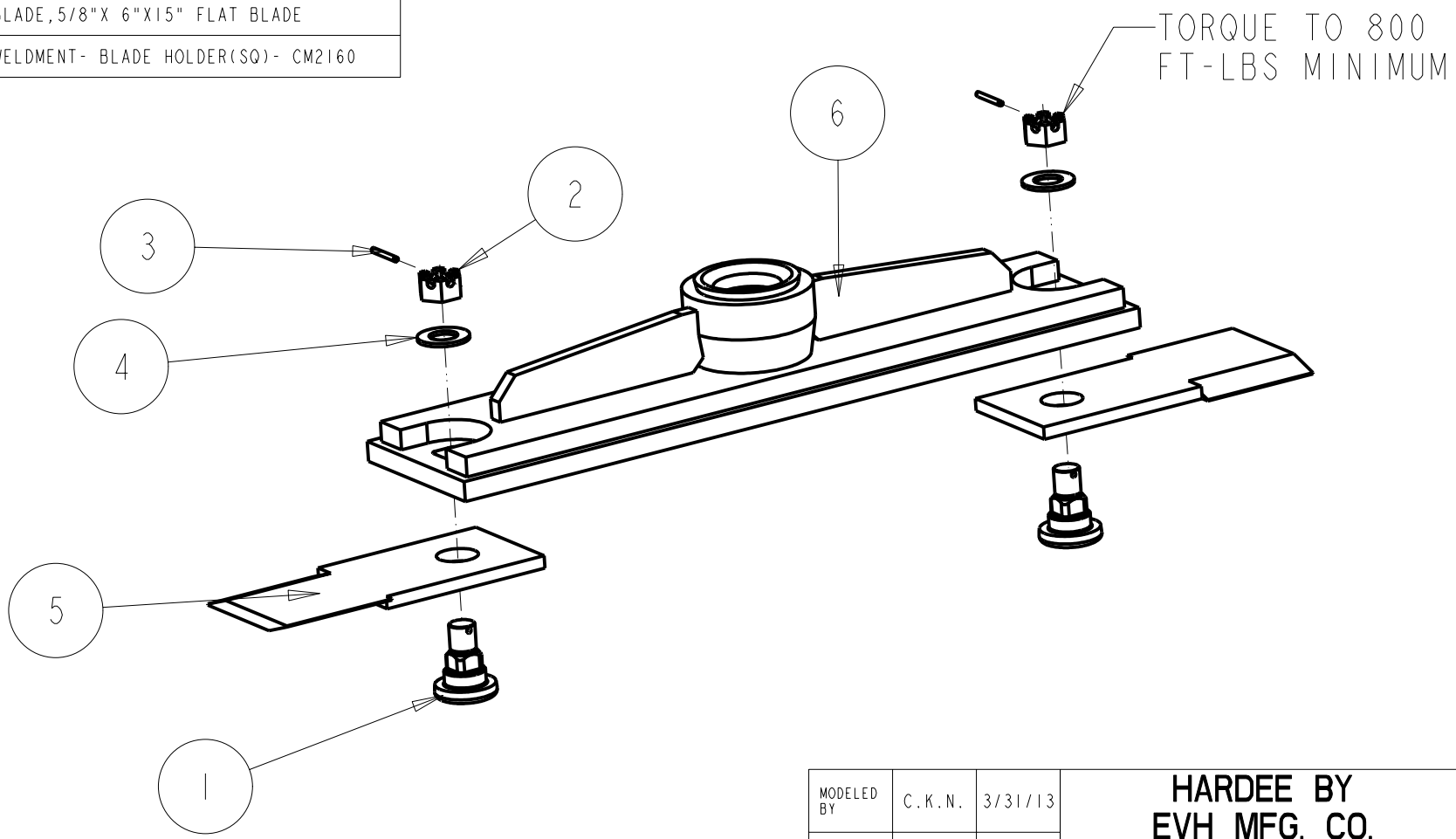

All Dimensions in Inches Unless Otherwise Specified
Dimensions in [ ] are in Millimeters

Tolerance Unless Otherwise Specified

Fractional Dimensions ± 1/16" Angular Dimensions ± 1°
Decimal Dim. to Limits Shown All Holes to be +0 -1/32"

MODELED BY	C.K.N.	3/31/13
DRAWN BY	C.K.N.	3/31/14
MATERIAL	R.M.N.	N/A

Manufactured By:
EVH Mfg. Co., LLC

HARDEE BY
EVH MFG. CO.
LORIS S.C.

DESCRIPTION: Blade Holder Assembly W/Blades - Square Holes

SHEET 1 of 1

DO NOT SCALE | A DWG SIZE | DWG. NO. 26765

Hydraulic Motor Housing Assembly
(Part # 16160)

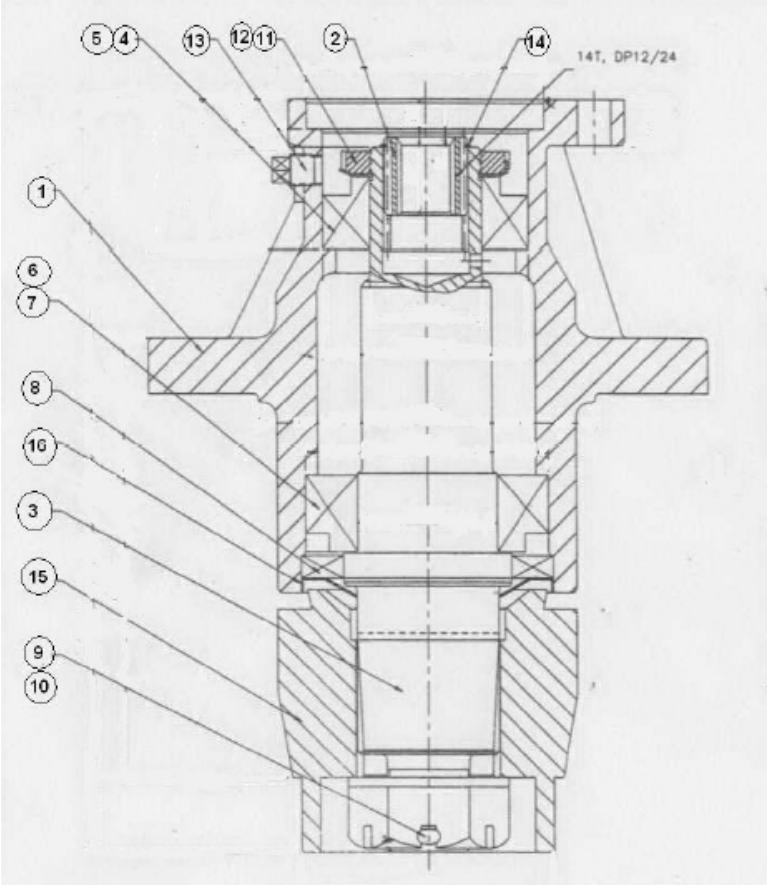

Item No.	Part No.	Quantity	Description
1	16203	1	Housing, MDH-100
2	16159	1	Spline Adapter
3	16204	1	Shaft
4	16205	1	Cup Bearing, 33215
5	16206	1	Cone Bearing, 33215
6	16207	1	Cup Bearing, 33212
7	16208	1	Cone Bearing, 33212
8	16197	1	Output Triple Lip Seal
9	15968	1	Cotter Pin 6.3mm x 60mm
10	16209	1	Hex Slotted Nut, 1-3/4” – 12UN
11	15966	1	Locknut, Bearing M60 x 2
12	15965	1	Lockwasher, M60
13	15784	2	3/8”-18NPT Pipe Plug
14	15970	1	Retaining Ring, External 45 mm
15	16190	1	Blade Hub
16	16210	1	Seal Protector

25793 Driveshaft

(1 3/8 - 21 spline Tractor end & 1 3/8 – 6 spline Imp. end)

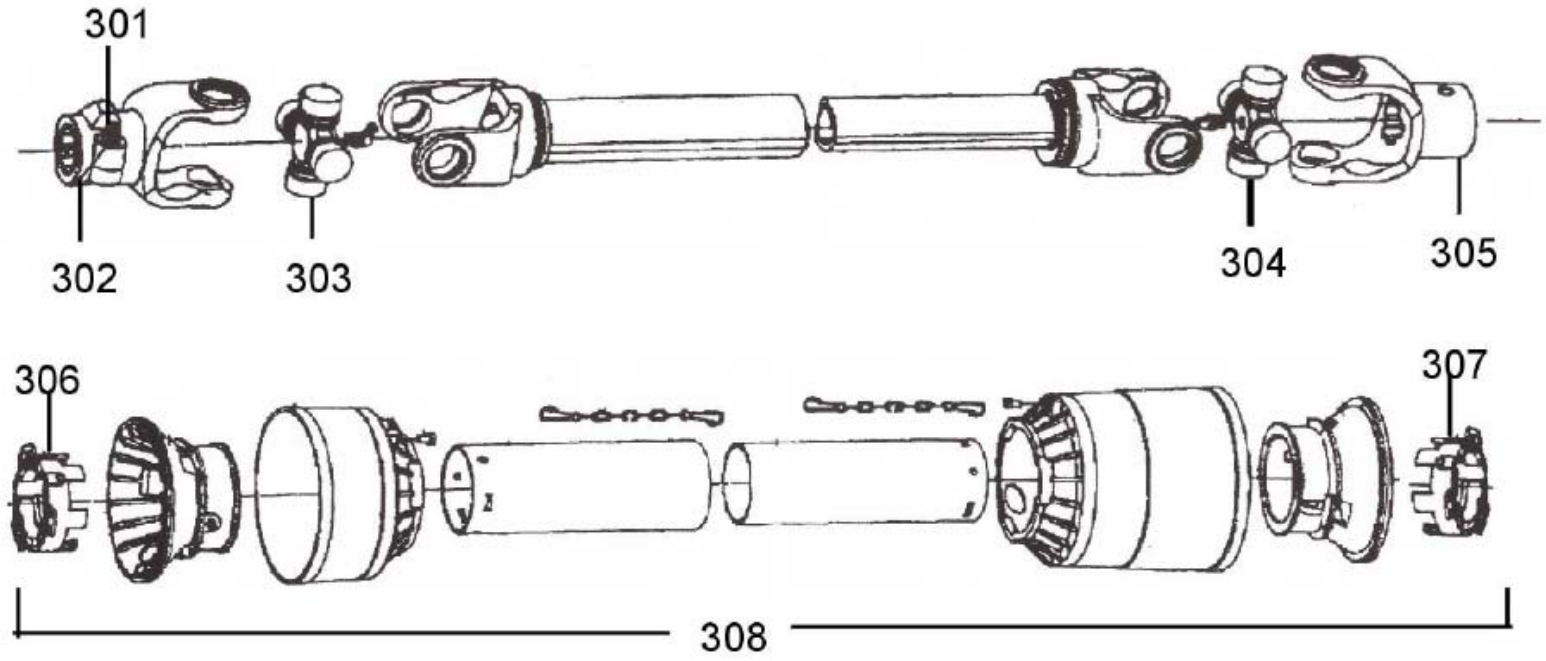

Key #	Part No.	Description	Key #	Part No.	Description
301	15579	Push Pin complete	305	16521	Yoke, Imp end
302	15900	Yoke, Tractor end	306	15804	Shield bearing
303	11437	Cross Kit	307	15805	Shield Bearing
304	11437	Cross Kit	308	11448	Shield kit complete

25792 Driveshaft

(1 3/4 - 20 spline Tractor end & 1 3/8 – 6 spline Imp. end)

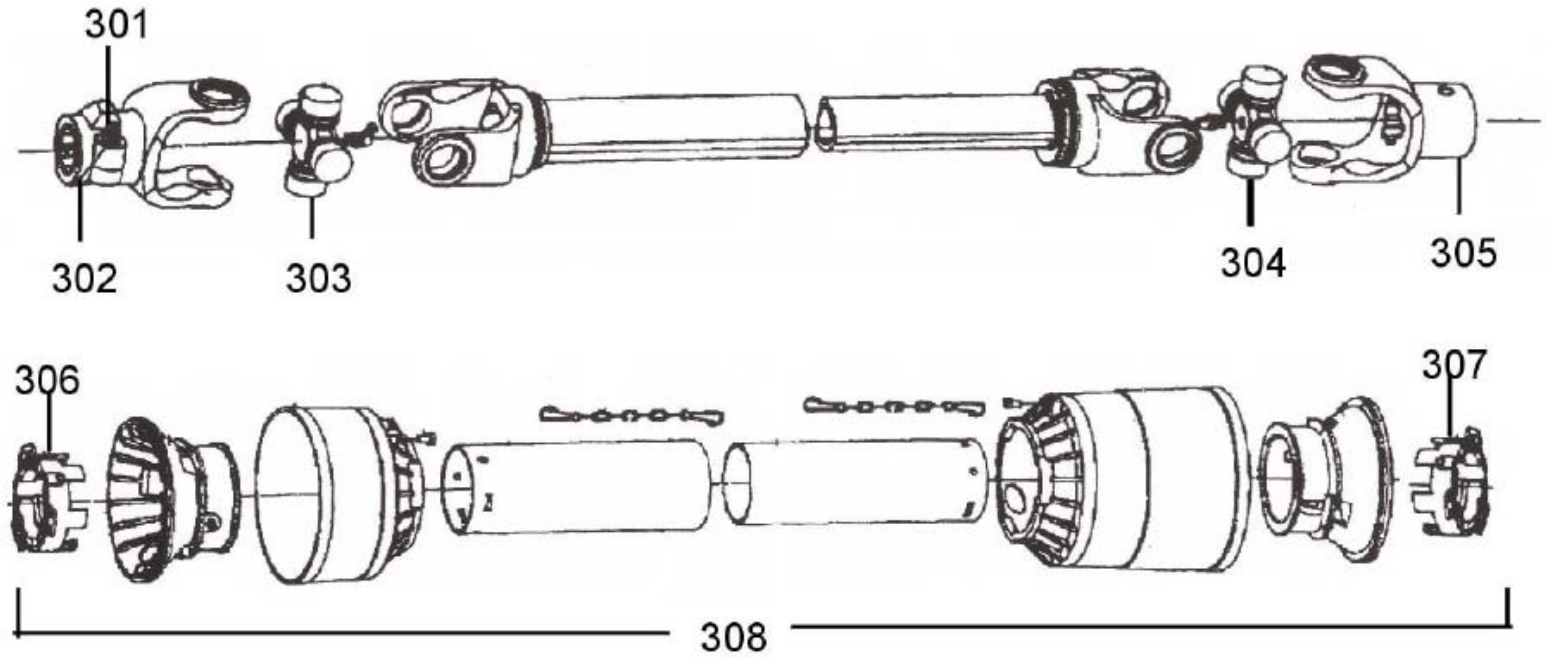

Key #	Part No.	Description	Key #	Part No.	Description
301	15579	Push Pin complete	305	15658	Yoke, Imp end
302	11855	Yoke, Tractor end	306	15804	Shield bearing
303	15629	Cross Kit	307	15805	Shield Bearing
304	15629	Cross Kit	308	11448	Shield kit complete

SECTION 8
BELTING

PARTS LISTING FOR CM2160 AND HR2360 FRONT BELTING EXTENSION KIT (PART # 25660)			
Item	Part Number	Qty.	Description
1	10032	7	Hex Bolt 3/8 x 1-1/2 gr.5 plated
2	22776	1	Belting Extension Flat
3	25661	1	Belting for HR2360 Extension
4	10175	7	3/8" Locknut (Gr.5 Plated)
5	10202	14	3/8" Flatwasher (Plated)
6	22731	1	Short Rubber Belting Flat

PARTS LISTING FOR CM2160 AND HR2360 FRONT BELTING-SHORT			
Item	Part Number	Qty.	Description
1	10032	2	Hex Bolt 3/8 x 1-1/2 gr.5 plated
2	25710	1	Belting Extension Flat
3	25664	1	Belting for HR2360 Extension
4	10175	2	3/8" Locknut (Gr.5 Plated)
5	10202	4	3/8" Flatwasher (Plated)

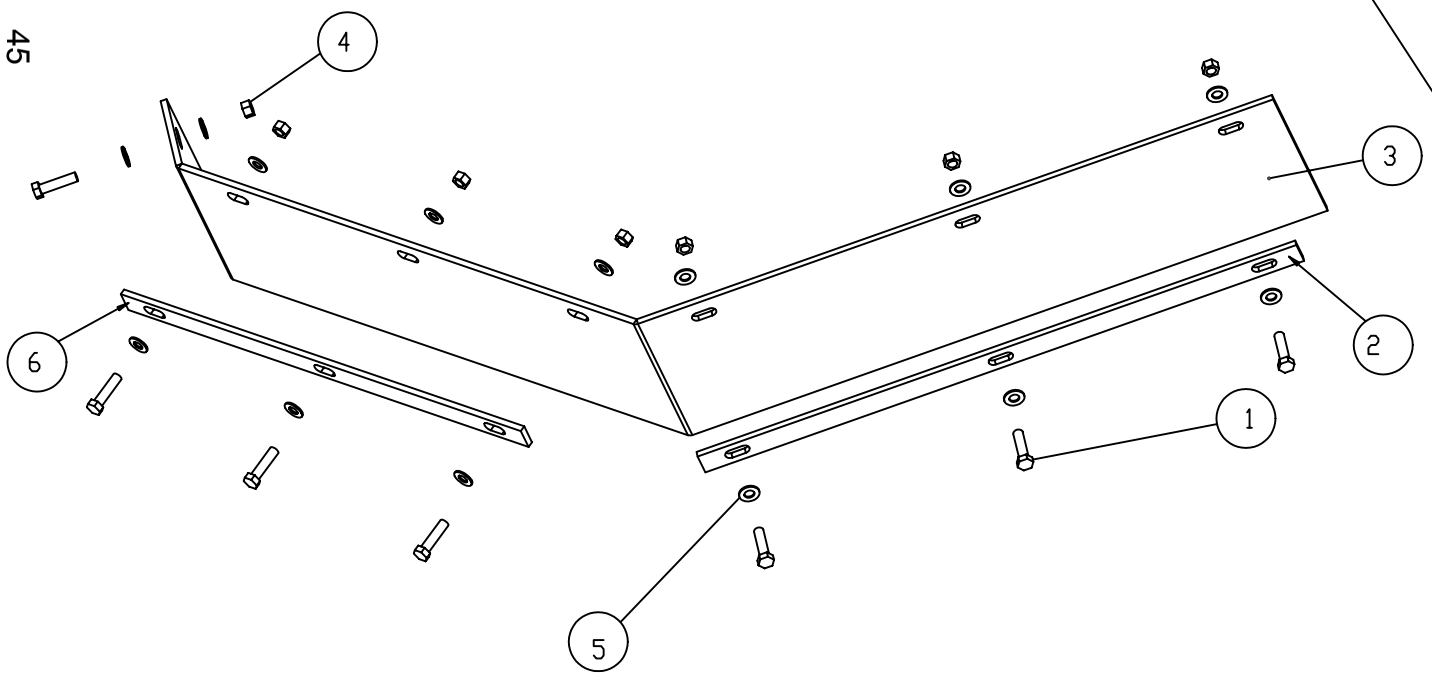

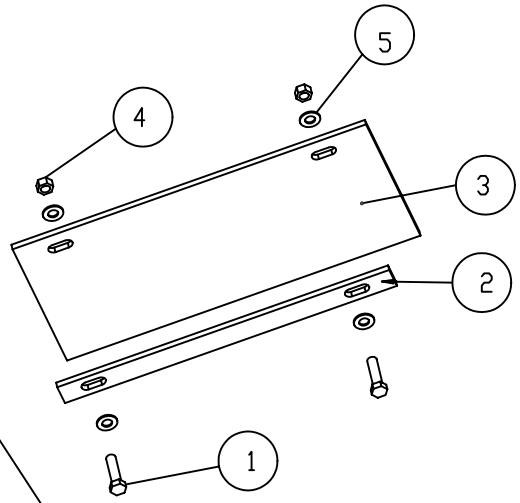

SECTION 8 - BELTING

PARTS LISTING FOR CM2160 AND HR2360 REAR BELTING KIT (PART # 25662)			
Item	Part Number	Qty.	Description
1	10032	7	Hex Bolt 3/8 x 1-1/2 gr.5 plated
2	10175	7	3/8" Locknut (Gr.5 Plated)
3	10202	14	3/8" Flatwasher (Plated)
4	25663	1	HR2360 Rubber Belting
5	22730	1	Long Rubber Belting Flat
6	22731	1	Short Rubber Belting Flat

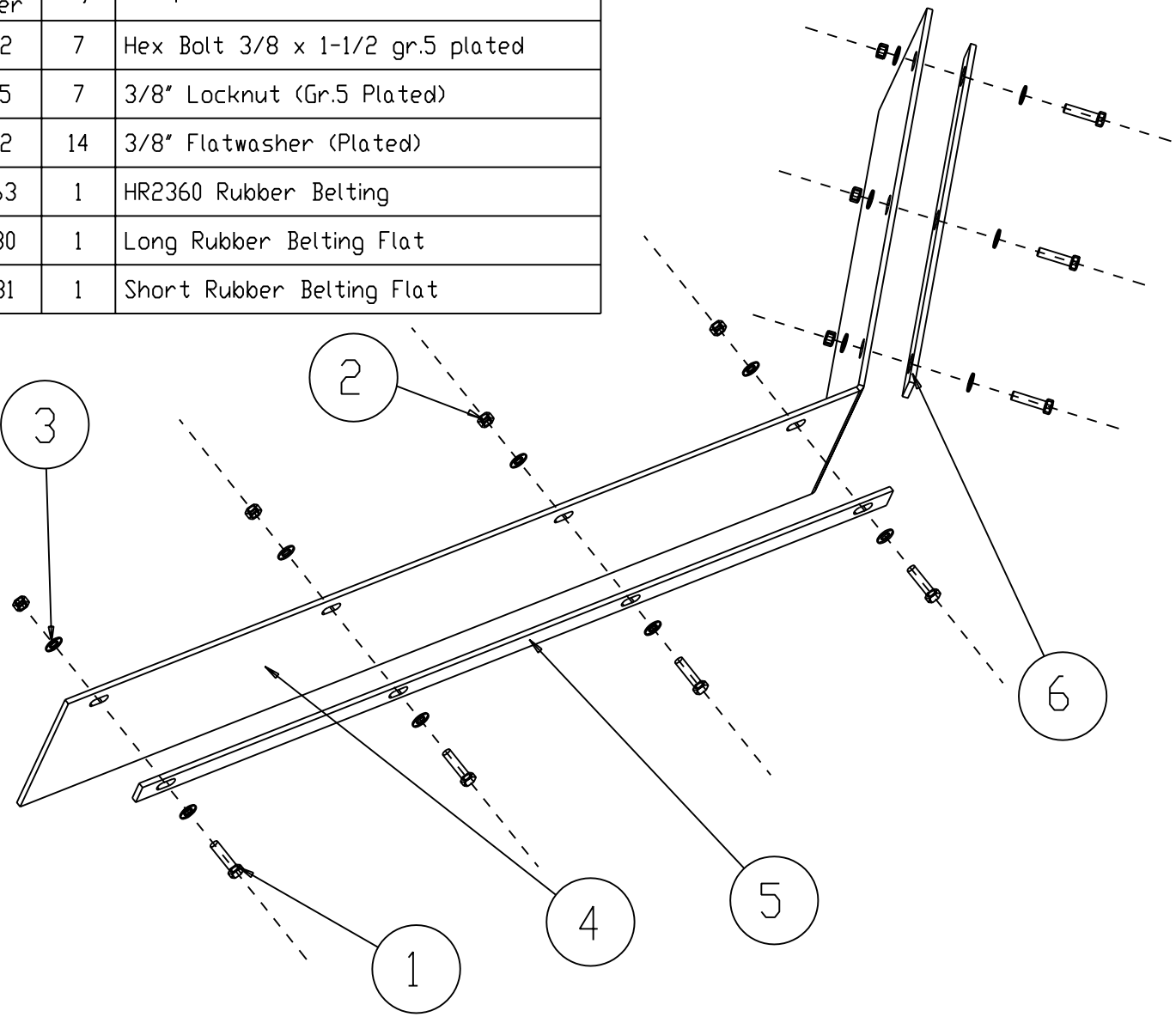

SECTION 8 - CHAIN GUARD

PARTS LISTING FOR CM2160 AND HR2360 FRONT CHAIN GUARD KIT (PART # 20989)			
Item	Part Number	Qty.	Description
1	10029	2	Hex Bolt 3/8 x 1-1/4 gr.5 plated
2	10031	7	Hex Bolt 3/8 x 1 gr.5 plated
3	10175	9	3/8" Locknut (Gr.5 Plated)
4	10202	18	3/8" Flatwasher (Plated)
5	10318	63	7 Link Chain
6	10332	4	Cable Clamp
7	20981	1	LR40160 Straight Chain Guard Weldment
8	20988	1	HR2360 Corner Chain Guard Weldment
9	20986	1	LR40160 Chain Guard Cable
10	20978	1	Chain Guard Weldment
11	20977	1	Chain Guard Cable

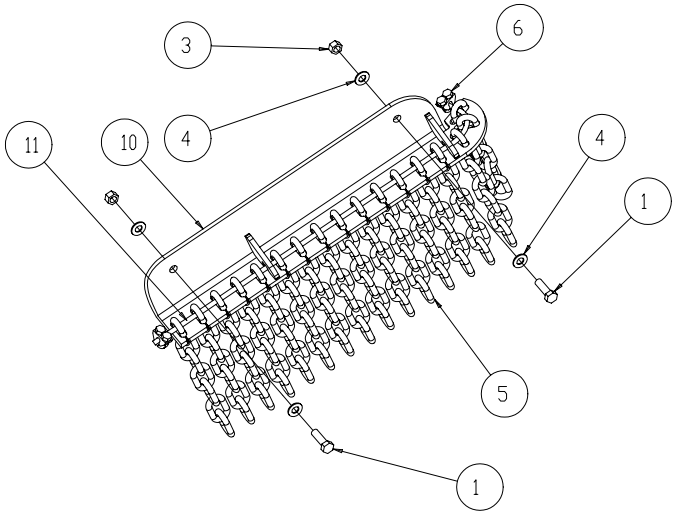

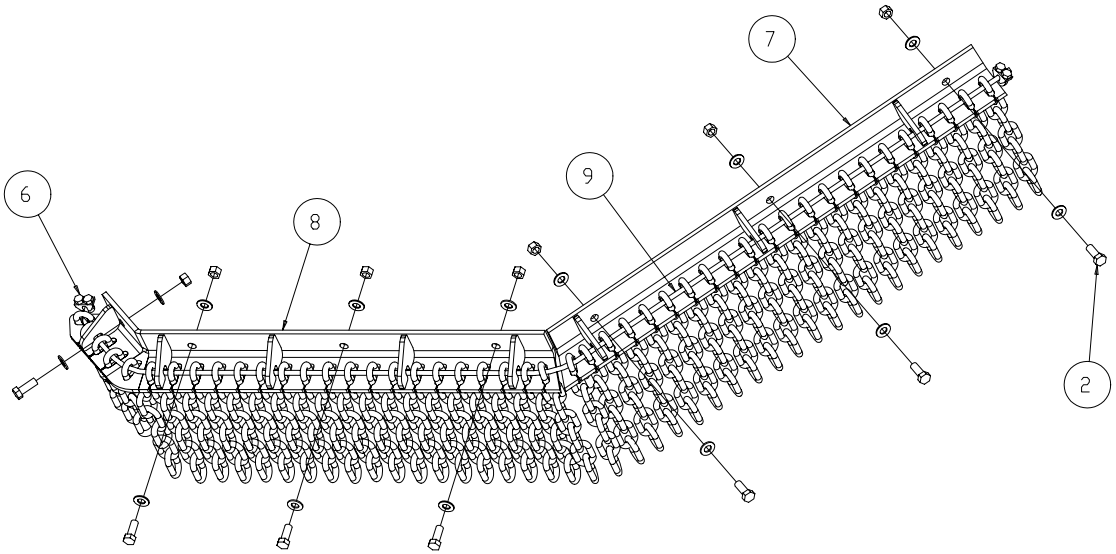

SECTION 8 - CHAIN GUARD

PARTS LISTING FOR CM2160 AND HR2360 REAR CHAIN GUARD KIT (PART # 20990)			
Item	Part Number	Qty.	Description
1	10031	7	Hex Bolt 3/8 x 1 gr.5 plated
2	10175	7	3/8" Locknut (Gr.5 Plated)
3	10202	14	3/8" Flatwasher (Plated)
4	10318	57	7 Link Chain
5	10332	2	Cable Clamp
6	20971	1	DB4060 Straight Chain Guard Weldment
7	20973	1	DB4060 Corner Chain Guard Weldment
8	20975	1	DB4060 Chain Guard Cable

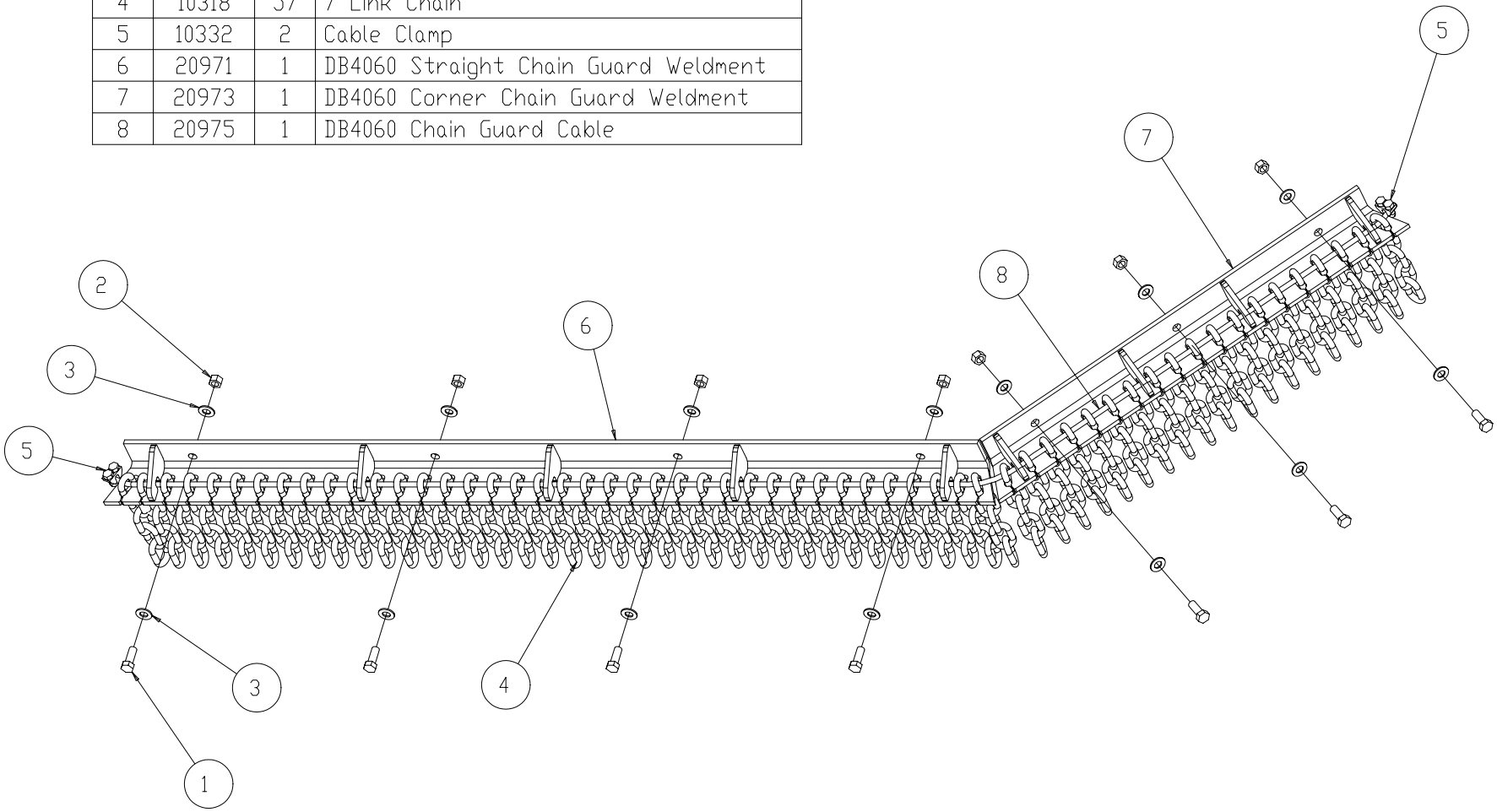

Bolt Torque

Checking Bolt Torque

The table shown below gives correct torque values for various bolts and capscrews. Tighten all bolts to the torque specified in the chart unless otherwise noted. Check tightness of bolts periodically, using bolt torque chart as a guide. Replace hardware with the same strength bolt. Torque figures indicated are valid for non-greased or non-oiled threads and heads unless otherwise specified.

Therefore, do not grease or oil bolts or capscrews unless otherwise specified in this manual. When using locking elements, increase torque values by 5%.

Torque value for bolts and capscrews are identified by their head markings.

Torque Specifications

Diameter	Bolt Torque					
	SAE-2		SAE-5		SAE-8	
"A"	LB-FT	N.m	LB-FT	N.m	LB-FT	N.m
1/4"	6	8	9	12	12	17
5/16"	10	13	19	25	27	36
3/8"	20	27	33	45	45	63
7/16"	30	41	53	72	75	100
1/2"	45	61	80	110	115	155
9/16"	70	95	115	155	165	220
5/8"	95	128	160	215	220	305
3/4"	165	225	290	390	400	540
7/8"	170	230	420	570	650	880
1"	225	345	630	850	970	1320

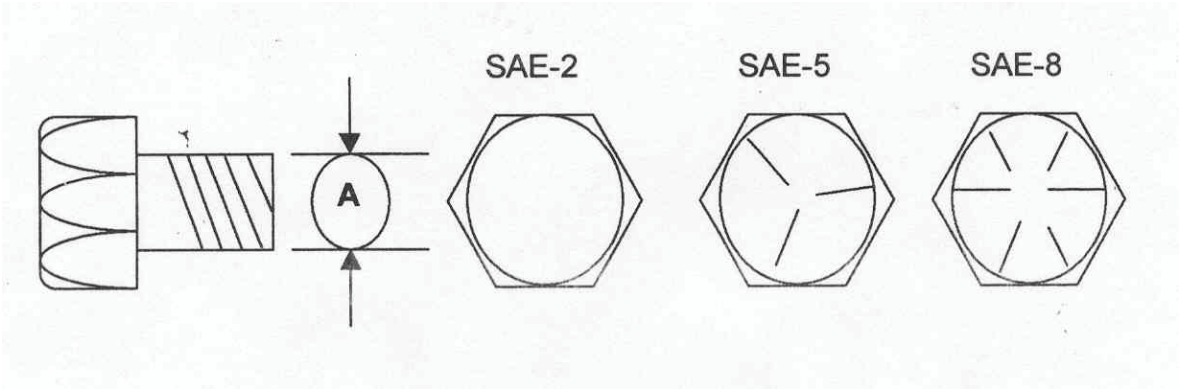

Hardee by EVH Manufacturing Co., LLC Hydraulic Mower Limited Warranty

Hardee by EVH Manufacturing Co., LLC warrants its **Hydraulic Mowers** for one year or **350 hours** (whichever comes first) to the **original** non-commercial, non-governmental, or non-municipal purchaser. For the **original** commercial, industrial, or municipal purchaser, the goods are warranted for 90 days or **350 hours** (whichever comes first) to be free from defects in material or workmanship.

This limited warranty does not apply to any part of the goods which have been subjected to improper or abnormal use, negligence, alteration, modification, accident, or damage due to lack of maintenance, wrong oil or lubricants, or which has served its normal life.

Hardee by EVH Manufacturing Co., LLC **Hydraulic Mowers** include the following units: Miti Mike-35, Tiger SS, DB4048, DB4060, EV1442, MR1442, LR40142, LR40148, LR50148, LR50160, HR2360, and CM2160 Mowers.

The Warranty Card **must** be filled out and returned within **30 days** of purchase. **No** warranty will be allowed without a properly completed and returned warranty card.

"Our obligation under this warranty shall be limited to repair or replacement of any part or parts of this implement, which, in our judgement, shows evidence of such defect, and provided further, that said parts shall be removed and returned by the owner at the owner's expense to Hardee by EVH Manufacturing Co., LLC, Loris, SC, through an authorized dealer, transportation prepaid, free and clear of liens or encumbrances."

This warranty shall not include normal wear items.

Changes or alterations to the implement made without the **written** authorization of the manufacturer will render this warranty void. **Tampering with or removing the factory installed hour meter will void this warranty.**

This warranty does not obligate this company to bear any labor costs in replacement of defective parts.

Hardee by EVH Manufacturing Co., LLC reserves the right to make changes or improvements in its equipment at any time, with the express understanding that such changes or improvements do not impose any obligation of the company to install such changes or improvements on implements previously manufactured.

Hardee by EVH Manufacturing Co., LLC Hydraulic Mowers are designed as **Agricultural** machines. They are designed to be used intermittently in **farm** use, **not** constantly as in "Commercial" use. Our machines are designed with brains instead of brawn, to fit the maximum number of tractors. They are not designed nor priced as Commercial machines that operate 8 hours a day / 5 days a week.

The CM2160 is the exception to the above statement, having been designed as a Commercial machine.

IMPLIED WARRANTIES: You may have some implied warranties. For example, you may have an implied warranty of merchantability (that the hydraulic mower is reasonably fit for the general purpose for which it was sold) or an implied warranty of fitness for a particular purpose (that the hydraulic mower is suitable for your special purposes). Special purposes must be specifically disclosed to Hardee by EVH Manufacturing Co., LLC, and not merely to the dealer before your purchase. Hardee by EVH Manufacturing Co., LLC itself must approve, in writing, that the special purpose is warrantable.

These implied warranties do not apply at all if you use your hydraulic mower for business or commercial use.

Revised 12-16-15

HARDEE

BY EVH MFG CO

EVH MANUFACTURING COMPANY, LLC
4895 RED BLUFF ROAD
LORIS, SC 29569
PHONE: 843-756-2555 OR 888-990-2555
WWW.HARDEEBYEVH.COM EVHMFG@HARDEEBYEVH.COM