MANUAL P/N 24550

HARDEE

BY EVH MFG CO

OPERATOR'S AND MAINTENANCE MANUAL

WITH PARTS LISTING

Long Reach Mower
Model: LR50148

FOR SERIAL #s STARTING
WITH 012098
RELEASED 10/27/15

DANGER
Read this manual and the manual for your tractor carefully to acquaint yourself with both machines before operating!

4895 RED BLUFF RD LORIS, SC 29569 (843) 756-2555

www.hardeebyevh.com evhmfg@hardeebyevh.com

MODEL NUMBER _____

SERIAL NUMBER _____

DATE OF PURCHASE _____

	Customer Pre-Operation Check List	Reference
☐	Read, understand and follow the general safety rules listed in this manual.	Page 2
☐	Check all shields and guards.	Page 2
☐	Cut driveshaft to the proper length for your tractor.	Page 8
☐	Add ballast to the rear tractor tires and space them six feet or wider apart.	Page 8
☐	Add ballast and front weights to your tractor, if needed.	Page 8
☐	Check all fluid levels, tractor and mower.	Page 11
☐	Turn gate valve under the oil tank "on".	Page 12
☐	Check all grease fittings.	Page 15

Service Notice

Please take extra care while servicing the hydraulic system by keeping all openings properly covered, thus preventing contamination of the hydraulic components. Contaminates in the oil WILL cause faulty operation or premature failure of components in the hydraulic control valve, pump, and motor.

Disclaimer

THIS MOWER IS NOT DESIGNED TO CUT TREES FROM TOP TO BOTTOM (VERTICALLY) WITH THE MOWER DECK IN THE HORIZONTAL POSITION (See Fig. 1). The mower is designed to trim branches with the mower deck in the VERTICAL position while moving the tractor forwards or backwards, repositioning the mower deck after each path (See Fig. 2).

The mower is also designed to cut tree trunks and branches up to 4" in diameter with the "Hinged Gate" in the unlocked, secured raised position and the mower deck in the HORIZONTAL position, perpendicular to the trunk and/or branch of the tree (See Fig. 3).

Any modes of operation other than the ones described above and shown below, while cutting trees and/or branches are not permitted and shall void the warranty. Moreover, HARDEE by EVH Manufacturing Company, LLC does not accept any liability to any person and/or material when the mower is operated in violation of the above information.

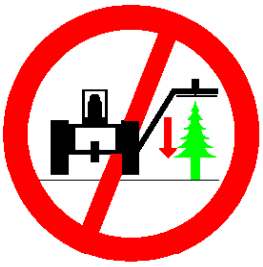

Fig. 1

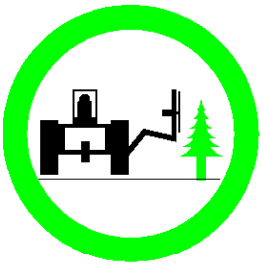

Fig. 2

Fig. 3

Table of Contents

Section 1 Introduction 1
- To Our Customers 1
- Owner's Responsibility 1
- Purpose Of This Manual 1
- Safety-Alert Symbol 1
- Signal Words 1
- Customer Assistance 1

Section 2 Safety Information 2
- General Safety Rules 2
- Safety Decals 3

Section 3 Assembly And Installation 7
- Component Identification And Terminology 7
- Tractor Requirements 8
- Driveshaft Installation 8
  - Driveshaft Installation On Pump Shaft 8
- Tractor Hook-Up Procedures 8
- Driveshaft Installation On PTO 9
- Hydraulic System Setup 9
  - Working Safely With Hydraulic Lines 9
- Description of Operation 9
- Joystick Functions 9
- Tethered Grip with Micro-Joysticks 10

Section 4 Operation 11
- Operation Instructions 11
  - During Operation 11
  - Daily Start-Up Checklist 11
- Operating Environment 11
  - Application Do's And Don'ts 11
- Using Your Mower 12
  - Getting Started 12
  - Joystick Control 12
  - Boom Breakaway 13
  - Mowing In Reverse 13
  - Side Dressing Trees 13
  - Cutting Larger Brush And Trees 13
- Unhook And Post Use Care 14
  - Unhooking The LR50148 14
  - Post Use Care 14

Section 5 Maintenance 15
- Maintenance And Service Schedule 15
  - First Stage Boom 15
  - First Stage Boom To Second Stage Boom 15
  - Deck And Second Stage Boom 15
  - Hydraulic Motor Housing & Belting Extension 15
  - Greasing PTO Driveshaft To Pump 15
- Inspection And Replacement Of Blades 16
  - Inspection And Replacement Of Blade Holder 16
    - Inspection 16
    - Replacement 16
- Checking the Main Relief Valve 16
- Cylinder Speed 17
- Adjusting the Cylinder Control Valve 17
  - Individual Cylinder Counterbalance Valves 17
- LR50148 Control Valve Port Listing 18
- Control Valve Port Schematic 19
- LR50148 Valve / Joystick Wiring Schematic 20
- Routine Maintenance Checklist 21

Section 6 Troubleshooting 22
- Troubleshooting Guide 22-23
- Fault Codes for Status LED 24
- Controller Diagram 25
- LR50148 Electric Schematic 26
- Oil Cooler Wiring Harness 27

Section 7 Specifications 28
- Summary Of Specifications 28

Section 8 Replacement Parts 29
- Parts Listing For Long Reach Cutter LR50148 29-38
- Blade Hydraulic / Cylinder Hydraulic Schematic 38
- Hydraulic Motor Housing Assembly 39
- Blade Holder Assembly Breakdown 40
- Rear Belting Breakdown 41
- Belting Extension Breakdown 42
- Front Chain Guard Breakdown 43
- Rear Chain Guard Breakdown 44
- Logo/Decal Replacement 45
- 10601 Driveshaft Breakdown 46
- 11716 Driveshaft Breakdown 47
- 11717 Driveshaft Breakdown 48

Section 9 Reference 49
- Bolt Torque 49
- Checking Bolt Torque 49
- Torque Specifications 50

Section 10 Warranty 51

Notes 52

© Copyright 2004 All Rights Reserved

Hardee by EVH provides this publication "as is" without warranty of any kind, either expressed or implied. Every precaution has been taken in the design of this manual, however Hardee by EVH assumes no responsibility for errors or omissions. Neither is any liability assumed for damages resulting from the use of the information contained herein. Hardee by EVH reserves the right to revise and improve this product at any time. The illustrations in this manual are not intended for the safe and proper assembly or disassembly of this product, but for parts ordering reference only.

To Our Customers

We at Hardee by EVH Manufacturing Company thank you for buying your new Long Reach Mower.

We have tried hard to build a mower to do the work you have in mind. Many hours of engineering, field-testing and improvement have gone into the design and fabrication of your mower. We will strive to continue this quality of manufacturing in the future, always keeping the customer's needs clearly in mind.

The best performance of your mower will depend on you. Proper lubrication, maintenance, hookup, adjustments and operation are essential for it to give you long and dependable service. However, as with any type of equipment, your mower is designed to perform specific functions.

In this manual, you will find instructions on mower features, maintenance and operation. If customer service or repair parts are required, contact your local Hardee dealer. Please specify model and serial number when ordering parts.

Owner's Responsibility

The manufacturer has no control over the ultimate use of the mower and therefore assumes no responsibility or liability for damage or injury resulting from the use of this machine.

The upkeep of the hydraulic mower is the responsibility of the user. This upkeep includes all shielding, guards, and safety decals (OSHA Regulation 1928.57). You can obtain replacement parts from any authorized Hardee dealer.

Read this Operator's Manual before operating the mower. Failure to do so could result in injury to the operator or to others. Remember that most accidents occur due to neglect or carelessness. The operator is responsible for inspecting and making repairs as may be necessary. Cleaning after each use and storage under a shelter will extend the life of the mower.

Purpose of This Manual

This manual provides information on safety, operation, adjustments, troubleshooting and maintenance of your new mower. Please read and follow all the recommendations to help ensure that you get many years of service from your new Hardee mower.

If you need additional copies of this manual, please contact your local Hardee dealer or download a copy from our website at www.hardeebyevh.com.

Safety-Alert Symbol

This symbol is the safety alert symbol. It appears throughout this manual to call your attention to instructions involving your personal safety and the safety of others. Failure to follow these instructions can result in injury or death.

Signal Words

Safety signal words are words that call attention to the safety sign and designate a degree or level of hazard seriousness. The signal words used throughout this manual are DANGER, WARNING and CAUTION. Please read and follow all safety messages that have these signal words shown for your protection.

DANGER

Indicates an imminently hazardous situation which, if not avoided, will result in death or serious injury.

WARNING

Indicates a potentially hazardous situation which, if not avoided, could result in death or serious injury.

CAUTION

Indicates a potentially hazardous situation which, if not avoided, may result in minor or moderate injury

Customer Assistance

The Hardee sales team would like you to be satisfied with your new Long Reach Mower. If for some reason you have any questions about the information in this manual or have a problem with your mower, please discuss the problem or question with the management of your local dealership. If further assistance is required, please contact:

Hardee By EVH Manufacturing Company, LLC
Sales Department
4895 Red Bluff Road
Loris, SC 29569
843-756-2555

General Safety Rules

This section of your manual will address the safe operation of your new mower. We at Hardee strive to produce a machine that is both a quality product and safe to operate. Please take the time to read, understand and follow the safety rules listed below and throughout this manual.

Your safety also depends on you becoming familiar with the basic operation of your new mower. You can find complete instructions for this mower in the Operation Instruction section of this manual. We believe that using your mower safely, in a safe environment will give you great results!

DANGER
This machine is designed for use on a closed cab tractor only! If your tractor has an open cab, then it MUST be equipped with operator protective equipment in the form of shielding from thrown objects and Roll Over Protective Structure (ROPS) to operate this equipment safely.

DANGER
Rotary mowers have the inherent ability to throw debris considerable distances when the blades are allowed to strike foreign objects. The operator must use caution or serious injury may result. Be sure by-standers are at a safe distance at all times when the cutter is in use.

WARNING
Always keep your tractor level as you reach over ditches, etc. Be careful to keep ample distance between the rear tire and the top of the ditch bank to avoid a cave-in of the bank.

WARNING
Failure to keep the tractor level may result in loss of traction, tipping, rollover, property damage, personal injury or death.

WARNING
Never stand, or allow others to stand, under the boom or mowerhead at any time. Never park the unit without placing the mowerhead squarely and firmly on the ground. Serious injury or death by crushing may occur in case of hydraulic failure.

DANGER
Do not look under the mowerhead or attempt to remove objects or branches from under the mowerhead while the tractor is running. Serious injury, loss of limb or death may result.

DANGER
Do not reach under the mowerhead at any time. Cutting blades may cause serious injury, loss of limb or disfigurement.

WARNING
Never use the mower for a crane or lifting device of any kind. It is not designed for this purpose. Serious damage to unit may occur. Serious bodily injury may be incurred from this misuse.

WARNING
Never use the mower for a man-lift or personnel lift. It is not designed for this purpose. Serious damage to unit may occur. Serious bodily injury may be incurred from this misuse.

DANGER
Never operate the mower within 10 feet of overhead power lines or utility lines. Do not trim trees with power lines running through them. Serious injury or death by electrocution may occur.

WARNING
Never allow the mower to impact rock piles, piles of gravel, steel guardrails or concrete abutments. Contact with these objects could cause blade failure. Serious machine damage, property damage or bodily injury may occur. Check the area for these items before mowing.

DANGER
Never attempt to use the mower to remove brush or trees larger than 4 inches in diameter. Failure to use caution when cutting trees, may lead to the tree falling on the mower deck and tipping the tractor over.

Safety Decals

Your Hardee mower ships with all safety decals in place. They are located in areas on the mower that are potentially hazardous. Please locate, read and follow the information you find on these decals.

By law, you must replace any safety decals that are damaged or missing. You can order replacement decals from any local Hardee dealer. Just ask for part number 15845.

To apply the replacement decals:

- Clean the surface to place the new decal.
- Peel the decal away from the paper backing.
- Press firmly onto the clean surface.
- Squeeze out any air pockets using a straight edge.

Deck

Danger – Thrown Object

Danger – Rotating Driveline

Operating Safety and General Instruction

Warning – Thrown Object (PN 11005)

Safety Decals, continued

Deck

Warning – Rotating Components

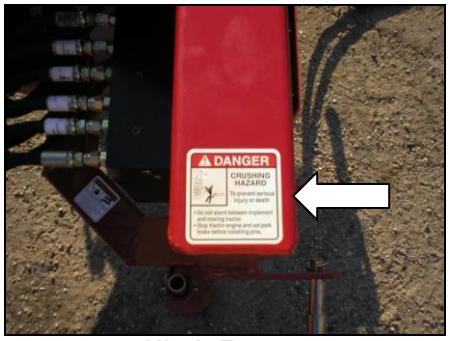

Hitch Frame

Danger – Crushing Hazard

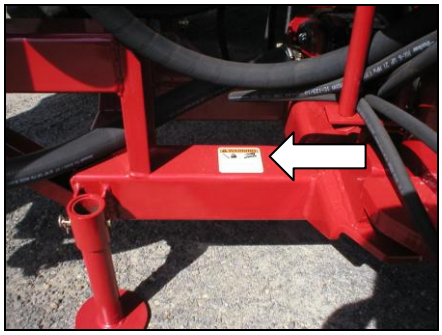

Hitch Frame

Warning – High Pressure Fluid Hazard

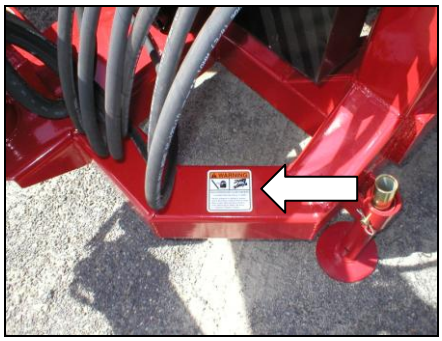

Hitch Frame

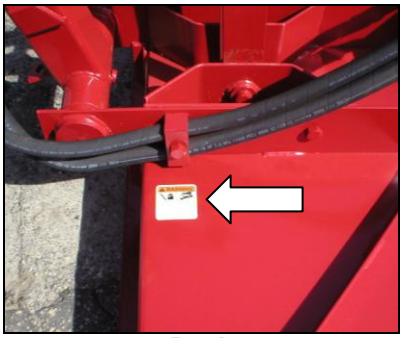

Deck

Safety Decals, continued

Deck Linkage

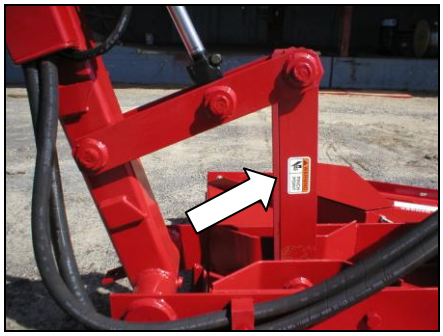

Deck Linkage

1st Stage Boom

1st Stage Boom

Warning – Pinch Point

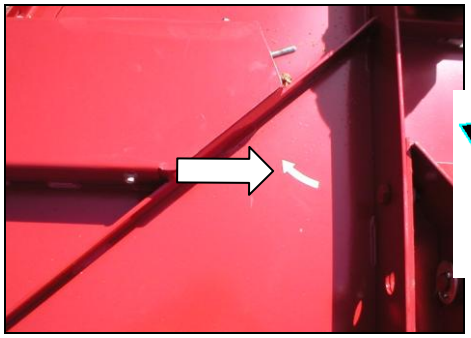

Deck

Blade Rotation

Hitch Frame

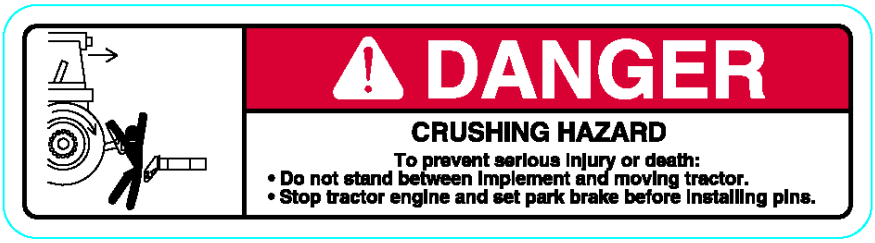

Danger – Crushing Hazard

Safety Decals, continued

Deck

Danger – Keep Clear

Hitch Frame

Danger – Electrocution, Falling and Crushing Hazard

Deck

Danger – Exposed Blades

Deck – Front/Rear

Weight Box – Front/Rear

15852 – Red Reflector, Rear
(Not Shown)

15853 – Yellow Reflector, Front

Component Identification and Terminology

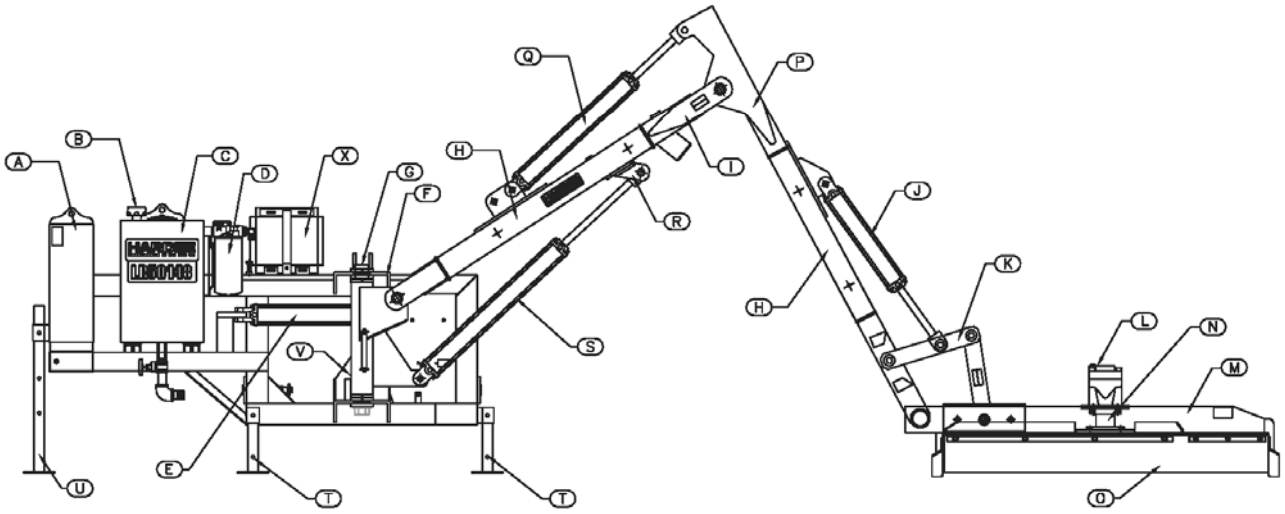

A	Weight Box	M	Deck
B	Flow Ezy Breather	N	Motor Drive Housing
C	Oil Tank	O	Rubber Shielding
D	Return Filter	P	2nd Stage (Reach) Boom
E	Swing Cylinder	Q	2nd Stage Cylinder
F	Hitch Frame	R	Lift Break-Away
G	Swing Post	S	1st Stage Cylinder
H	Hose Guard	T	Short Stand
I	1st Stage (Lift) Boom	U	Long Stand
J	Deck Cylinder	V	Hydraulic Pump
K	Deck Linkage	X	Oil Cooler
L	Hydraulic Motor		

Tractor Requirements

The Long Reach Mower you have purchased is designed for use with 90 horsepower; 4-wheel drive or 100 horsepower; 2-wheel drive and above tractors, equipped with a 540 RPM or 1000 RPM rear power take-off (PTO).

Your tractor must also be equipped with a standard hitch. A category 2 or 3 quick hitch can also be used with this mower.

To insure stability of your tractor, the rear tires should be spaced at their widest setting. We recommend six feet or wider. You should also add ballast to maintain proper steering control and balance. In addition, unless your tractor is 4-wheel drive, you may also need to add front weights. Please refer to the operator's manual for your tractor to determine the correct setup.

DANGER

This machine is designed for use on a closed cab tractor only! If your tractor has an open cab, then it MUST be equipped with operator protective equipment in the form of shielding from thrown objects and Roll Over Protective Structure (ROPS) to operate this equipment safely.

Driveshaft Installation

The make of your tractor will determine the length of driveshaft you require to connect from the end of the pump shaft to the PTO connection of your tractor. This step may require cutting the standard driveshaft included with the Hardee mower. We recommend contacting your local Hardee dealer for assistance.

Driveshaft Installation on Pump Shaft

Refer to Figure 1 for reference

- ✓ Verify that driveshaft is the proper length.
- ✓ Grease both pump shaft and driveshaft.
- ✓ Attach equipment end of driveshaft to pump. *Tractor end has a figure of a tractor stamped onto the guard.*
- ✓ Rotate driveshaft to line up holes for securing with the bolt and nut provided.
- ✓ Fix shaft guard to the mower using anti-rotation chain.

Figure 1

Tractor Hook-Up Procedures

- ✓ Hook Tractor 3-point hitch to mower hitch frame. The LR50148 is designed to work with a standard, category 2 or 3 quick hitch.

WARNING

Before leaving the tractor seat, always engage the tractor brake and/or set the transmission of the tractor in parking gear. Stop engine and remove key.
Always make sure that no one is between the tractor and the mower when tractor is in motion.

- ✓ Attach driveline to tractor (PTO shaft). *(See below for instructions)*
  - Verify that the shaft is sufficiently lubed before attachment.
  - Verify that drive shaft is the proper length.
- ✓ Connect joystick to bulkhead connector on the wire cover panel of the controller.
- ✓ Connect joystick to 12-volt system. (Cigarette lighter plug provided with Joystick. Hardee dealer can supply receptacle).
- ✓ Raise all jack stands before moving mower.

Driveshaft Installation on PTO

WARNING

Never attempt any checks, repairs or adjustments with the tractor engine running or the PTO engaged. Adjustment of rotating parts with tractor engine running may result in severe personal injury or death if the PTO accidentally engages.

- ✓ Lift tractor PTO guard.
- ✓ Pull U-joint guard back along driveshaft.
- ✓ Press driveshaft yoke plunger in and slip driveshaft U-joint yoke onto splined PTO shaft. Ensure that yoke plunger returns to locked position.
- ✓ Position U-joint guard over driveshaft U-joint.
- ✓ Lower tractor PTO guard.
- ✓ Fix shaft guard to tractor with anti-rotation chain.

Hydraulic System Setup

IMPORTANT

The hydraulic system setup information contained in the following sections should be used only as a guide. Consult your local Hardee dealer or mower manufacturer for more detailed information.

Working Safely with Hydraulic Lines

Purge all air from hydraulic system before attempting to raise or lower the mower boom and deck.

DANGER

Stand clear if lowering or raising deck, hydraulic deck can fall suddenly from system failure.

DANGER

Do not use your hand or skin to check for hydraulic leaks, use cardboard or wood. High-pressure oil leaks can penetrate skin causing injury and gangrene. Consult a doctor immediately. Always wear safety goggles when working around high-pressure lines.

Description of Operation

The LR50148 is set-up at the factory as a self-contained hydraulic system. This means that the mower pump powers **ALL** hydraulic functions.

A Programmable Processor *(Refer to Page 25)* controls four cylinder functions (swing, first stage boom lift, second stage boom lift, and mower deck tilt) and one motor function which drives the mower head. A single tethered handheld grip serves as the operator input. The grip includes a dead-man bar, a left two-axis thumb controlled proportional joystick, a right two-axis thumb controlled proportional joystick and a momentary switch controlling a latching circuit turning the mower head motor on and off. A proximity switch is used to decelerate the swing velocity near both stroke ends.

Joystick Functions

- ✓ Left X-axis (horizontal) controls Deck Down (W) and Deck Up (E).
- ✓ Left Y-axis (vertical) controls First Stage Boom Up (N) and Boom Down (S).
- ✓ Right X-axis (horizontal) controls Swing Left (W) and Swing Right (E). Proximity switch decreases output to Swing by 50% when actuated.
- ✓ Right Y-axis (vertical) controls Second Stage Boom Up (N) and Boom Down (S).
- ✓ LED should be Red when mower head motor is active and Green when the system is active but the mower head is off. LED remains active if dead-man is released until system hibernates.
- ✓ Push Button controls mower head motor. Motor switches on when dead-man bar is depressed and push button is held for two seconds. Motor switches OFF when push button is instantly depressed or fifteen seconds after the dead-man bar is released.
- ✓ System becomes active when Dead-Man Bar is depressed for two seconds. Bar must remain depressed for all control functions to be active except for the fifteen second motor off delay mentioned above. System Hibernates after ten minutes of inactivity on the Dead-Man Bar.

Refer to Figure 2 for joystick functions on Page 10.

TETHERED GRIP WITH MICRO-JOYSTICKS

1W – DECK DOWN
1E – DECK UP
1N – 1ST STAGE BOOM UP
1S – 1ST STAGE BOOM DOWN

2W – SWING LEFT
2E – SWING RIGHT
2N – 2ND STAGE BOOM UP
2S – 2ND STAGE BOOM DOWN

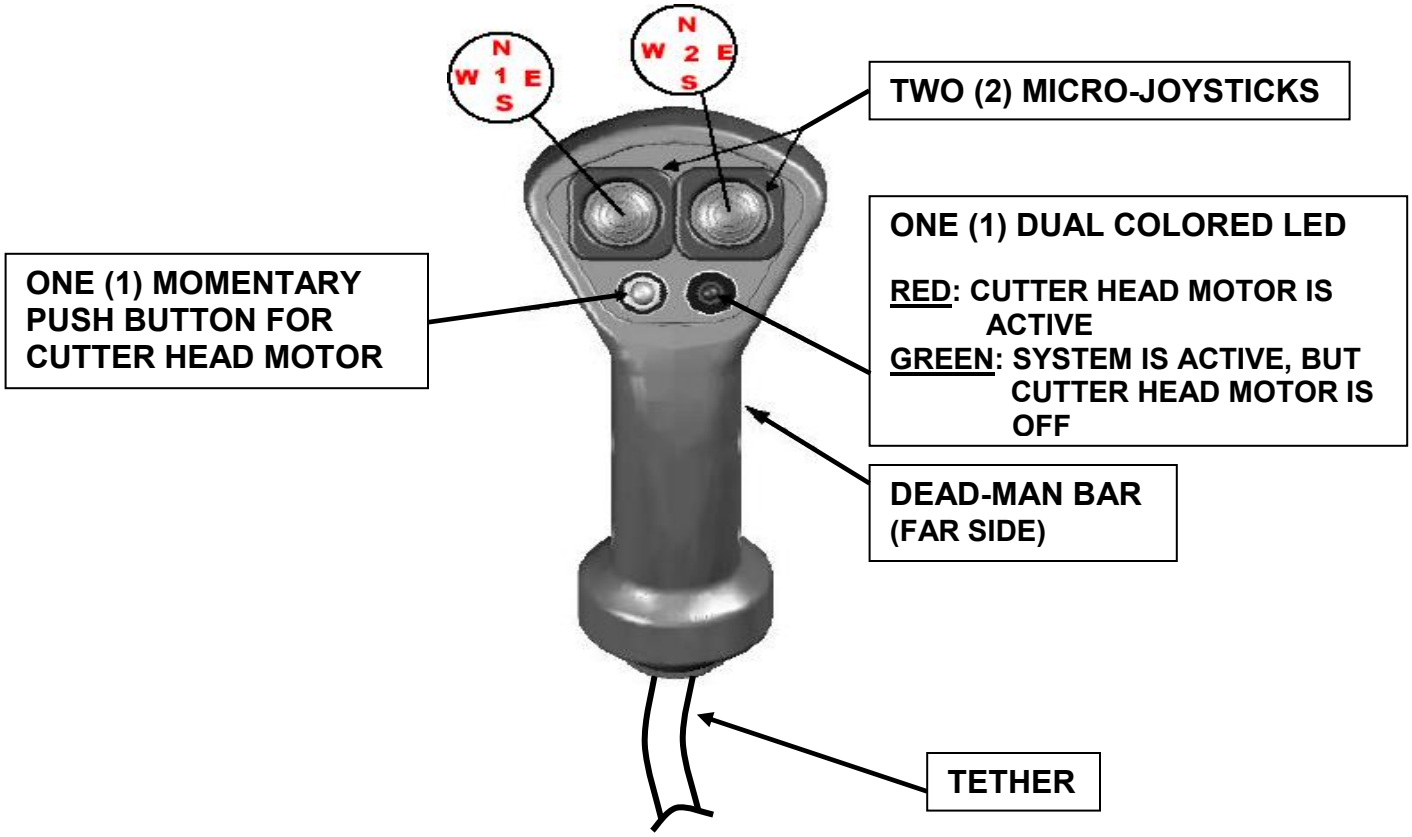

JOYSTICK RECALIBRATION

CLEAR CURRENT CALIBRATION

1.0 - POWER UP THE CONTROLLER BOX WITH JOYSTICK CONNECTOR (***ENGINE SHOULD BE SHUT OFF***).
2.0 - PULL "DEAD-MAN BAR" UNTIL GREEN LED COMES ON, THEN RELEASE "DEAD-MAN BAR".
3.0 - HOLD DOWN THE CUTTER HEAD SWITCH (***ENGINE SHOULD BE SHUT OFF***) WHILE PUSHING THE LEFT JOYSTICK (1) UP AND THE RIGHT JOYSTICK (2) DOWN FOR 5-SECONDS.
THE GREEN **LED** WILL BEGIN TO FLASH, INDICATING THE CALIBATION HAS BEEN RESET.

CALIBRATE JOYSTICK

4.0 -WITH JOYSTICK (1): PUSH AND HOLD IN EACH DIRECTION FOR 5 SECONDS EACH. **N, S, W** AND **E**
5.0 -WITH JOYSTICK (2): PUSH AND HOLD IN EACH DIRECTION FOR 5 SECONDS EACH. **N, S, W** AND **E**
6.0 -AFTER THE CALIBRATION HAS BEEN COMPLETED THE GREEN LED WILL STOP FLASHING.
7.0 -POWER DOWN THE CONTROLLER FOR 10 SECONDS AND THEN POWER UP THE SYSTEM AGAIN. PULL THE DEAD-MAN BAR FOR 2 SECONDS TO VERIFY THAT CALIBRATION WAS ACCEPTED (THE **LED** WILL BE A STEADY GREEN).
NOTE: THE BOOM AND SWING FUCTIONS WILL NOT WORK UNTIL ALL POSITIONS OF THE JOYSTICKS ARE CALIBRATED.

Operation Instructions

During Operation

WARNING
Ensure that all bystanders are clear of the mower before starting tractor engine. Objects thrown by the mower blades can cause severe personal injury or death.

Before any operation of the mower, be familiar with the locations and functions of the unit's controls. Being familiar with the mower and its controls will increase efficiency and reduce the possibility of serious injury or damage to the unit.

The operator should work slowly and carefully until he feels comfortable with the mower. Speed and skill will be attained much more easily if the necessary time is spent to familiarize yourself with the mower and its operation.

Get into the habit of completing a walkaround inspection before use. This procedure is a simple method of inspecting your unit's condition by walking around and looking at each component of the unit, including the tractor. This procedure has been used by airline pilots for many years as a final inspection before flight and is also used by long distance ground transportation drivers on buses and trucks. During the walkaround, you will visually search your units tire condition, look for hydraulic leaks, fuel leaks, inspect hose condition and condition of hydraulic cylinders. Look for loose or worn components, see that all guards are in place, check blade condition, look for broken or inoperative lights and determine that it is or is not operable before use. We recommend that you follow this procedure before start up.

Daily Start-Up Checklist		
	Check	Section
☐	Check All Fluid Levels, Tractor & Mower, *For best results, use Hardee hydraulic oil – part number 23333*	-
☐	Grease Points	Page 15
☐	PTO Shaft, Check Grease	Page 15
☐	Blade Tightness	Page 16

Operating Environment

Application Do's and Don'ts
There are obvious and hidden potential hazards in operating this mower. **REMEMBER!** This machine is often operated in rough terrain conditions that include gullies, holes, slopes and hidden obstructions. Serious injury or even death may occur unless care is taken to assure the safety of the operator and bystanders in the area.

Included here is a list of safety messages, which should be followed. Observing these messages and using common sense learned from experience help eliminate the hazards of operating this and other machinery.

DANGER
*Read this manual and the manual for the tractor carefully to acquaint yourself with both machines before operating. **REMEMBER**, power-driven equipment should be operated only by those trained and familiar with the operation and instructed to do so. Working with unfamiliar equipment or in unfamiliar conditions can lead to accidents.*

WARNING
Before leaving the tractor seat, always engage the tractor brake and/or set the transmission of the tractor in parking gear. Stop engine and remove key.

DANGER
Never allow riders on tractor or equipment. Falling off can cause serious injury or death.

WARNING
Worn or dull mower blades can cause excessive mower vibration resulting in damage to the gearbox and structural damage to the mower. You should replace or sharpen blades in pairs. Excessive vibration can cause rotating parts to break and fly off the mower, causing serious injury or death to the operator or bystanders.

DANGER
Do not modify or alter this machine or any of its components or any equipment function without consulting HARDEE BY EVH Manufacturing Company.

Using Your Mower

Getting Started
You will need to spend some time getting the "feel" of your new mower. Spend time reviewing the following steps before using your mower for the first time. The time that you take will greatly enhance your ability to get the desired results when you begin mowing.

- ✓ Locate the tethered grip mounted on the right side of the tractor and move the two joysticks through the positions shown on the instruction decal.
- ✓ The next step is to attach the mower to the tractor, see the hook-up procedures on page 8 for complete instructions. After you have the mower attached, double check to ensure that no part of the tractor is in contact with the mower.
- ✓ Next, follow the instructions for installing the driveshaft. Check to see that all PTO guards are in place correctly.
- ✓ Connect joystick cable to the bulkhead connector on the wire cover box. Make sure that all hoses and the joystick connection cable will not contact the PTO shaft. Use velcro straps to tie pendant cable to top link.
- ✓ Check the blades for sharpness. Check the blade carrier castle nut and both blade bolts for tightness. Verify that the gate valve under the oil tank is "on". *The mower is shipped with the gate valve in the "off" position.*

⚠ Danger
Before proceeding, make sure that no other persons are in close proximity to the mower!

- ✓ With all controls in neutral, the tractor in park, the throttle in idle position and the joystick power switch off… Start the tractor engine.
- ✓ Slowly engage the PTO shaft.
- ✓ Now with the mower under power, practice using the joystick to control the movement of the mowerhead and boom arms.

Joystick Control
- Turn "Power On" switch located to the right of the joystick control handle, "on".

After you feel comfortable with the basic mower control, the next step is to start the blades.

- ✓ Hold lower left-hand button for (2) two seconds or unit LED turns red.

⚠ Danger
Do not change the blade rotation direction! Blades must rotate in the clockwise direction indicated by the rotation decal on the mower deck.

- ✓ After the mower is running smoothly, increase the tractor to 800 PTO RPM (Max.1000 RPM) and lift the mowerhead off the ground. Swing the mowerhead to the mowing position, which is three 'o clock on the right side of your tractor. (If moving in reverse, swing deck back 15°).
- ✓ Release the tractor from park and put the transmission in low range. You are now in mowing mode and are underway.

The terrain and the kind of material being cut will determine your ground speed. Remember that you will need to raise and lower the mowerhead to follow the ground contour you are cutting.

Boom Breakaway
The LR50148 is designed with an automatic breakaway system to protect the mower booms. This works when the mowerhead contacts a solid obstruction or the mowerhead is "grounded" while the tractor is in motion. The breakaway is activated through the hydraulic valve and will function mowing both forward and backward.

When the mowerhead strikes a solid object the booms will begin to break back, IMMEDIATELY stop your tractor and adjust the position of the booms to clear the object.

If you "ground" the mowerhead and the booms begin to break back, simply lift the boom slightly to free the mowerhead, then swing the boom back into normal mowing position. *See figure 2*

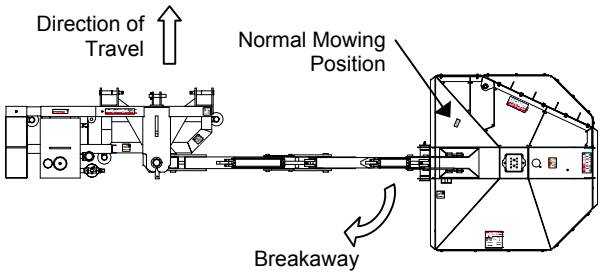

Figure 2

Mowing in Reverse
Your Hardee unit can cut as easily when the tractor is moving in reverse as forward. The breakaway protection works in the same way. The only difference being you must swing the booms to the rear 10 – 15 degrees. This will allow for more boom breakaway travel. This space is critical so as not to bottom-out the boom arm. *See figure 3*

Caution

You will do severe damage to your mower if you allow the boom arm to reach the bottoming-out point!

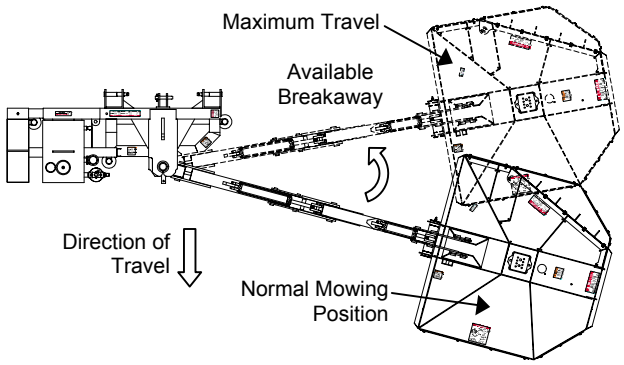

Figure 3

Caution

You must allow for the extra boom travel when mowing in reverse. See figure 3. If you have any questions about these instructions, please ask your local Hardee dealer immediately! Warranty claims for equipment used improperly will not be accepted.

Side Dressing Trees
The design of your heavy-duty brush mower will allow you to "side dress" trees if needed. To do this, raise the booms to the desired height and tilt the mowerhead to the vertical position. With the blades "on" move forward slowly, removing only approximately 12 inches of material per pass.

DANGER

Never operate the mower within 10 feet of overhead power lines or utility lines. Do not trim trees with power lines running through them. Serious injury or death by electrocution may occur.

Cutting Larger Brush and Trees
A unique feature on the LR50148 is the mowerhead "HINGED GATE". The "HINGED GATE" is used when you need to remove trees as large as 4 inches in diameter. This is accomplished in the following manner:

- ✓ Be sure that the mower blades and tractor are turned "OFF".
- ✓ Unlock the "HINGED GATE" by removing the two bolts. *Refer to Figure 5 & 6 on Page 14.*
- ✓ Replace one bolt on the main deck for storage and use the second bolt to lock the gate in its raised up position.

Figure 5

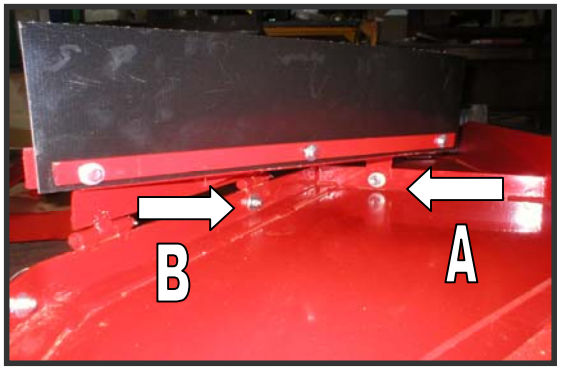

Figure 6

Figure 6 shows the two sets of bolts, nuts and washers that go on the "HINGED GATE". Bolt A is used to lockdown the hinged gates to the LR50148 DECK when cutting trees and bolt B is tightened onto the deck for storage during the tree-cutting process.

DANGER

Never attempt to use the cutter to remove brush or trees larger than 4 inches in diameter. Failure to use caution when cutting trees, may lead to the tree falling on the cutter deck and tipping the tractor over. We recommend removing small sections at a time, no more than two or three feet in length per pass. See fig. 5.

Unhook and Post Use Care

Before unhooking the tractor from your mower, always clean the unit thoroughly to remove any grass, mud or debris. This mower should always be stored on a hard level surface.

Unhooking the LR50148

- ✓ To unhook from your unit, first lower all jack stands to the storage position.
- ✓ Lower the tractor lift arms so that the mower will rest firmly and evenly on all jack stands.
- ✓ Lower the boom arms and mower deck so that they too rest firmly on the ground.
- ✓ Be sure to relieve all hydraulic pressure on the boom arms and deck before unhooking.
- ✓ Disconnect driveshaft from tractor.
- ✓ Disconnect joystick cable at the bulkhead connector on the wire cover box.
- ✓ Unhook tractor hitch from 3-point frame on mower

POST USE CARE

- Never leave the driveshaft hanging down and touching the ground.

Maintenance and Service Schedule

This section is dedicated to the maintenance of the LR50148. As with any piece of equipment, the performance and life span depends on the proper operation and maintenance.

⚠ DANGER

Never attempt any checks, repairs or adjustments with tractor engine running or the power take-off engaged. Adjustment of rotating parts while the tractor engine is running can result in serious personal injury or death if the PTO accidentally engages.

First Stage Boom
Inject with heavy multi-purpose grease. There are five grease fittings on the swing post.

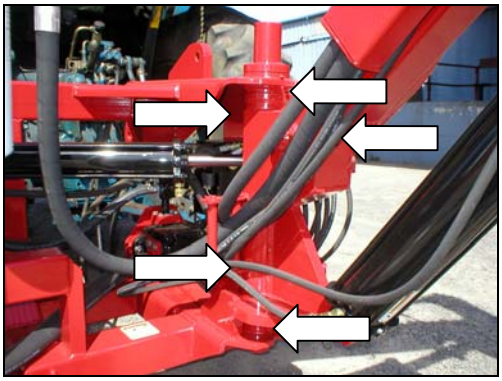

First Stage Boom to Second Stage Boom
Inject with heavy multi-purpose grease. *There is a grease fitting at every hinge point.*

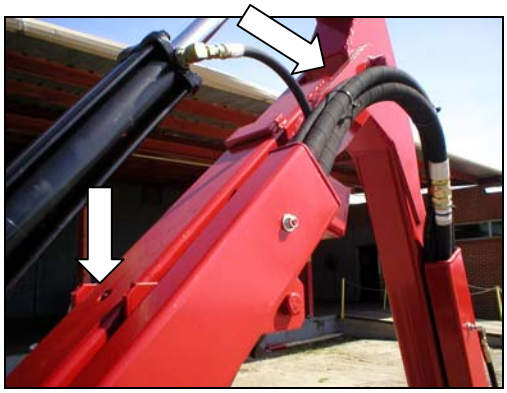

Deck and Second Stage Boom
Inject with heavy multi-purpose grease.

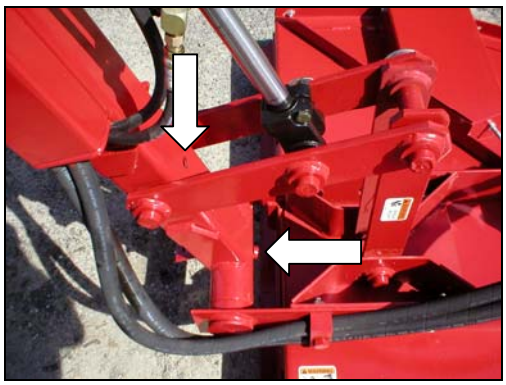

Hydraulic Motor Housing Assembly
Locate fitting on motor housing. Inject with 90W gear oil.

Greasing PTO Driveshaft to Pump
Remove PTO shaft from mower before greasing. Use heavy multi-purpose grease at all grease fitting and on shaft. Remember to grease the shield grease fittings as well as the u-joints.

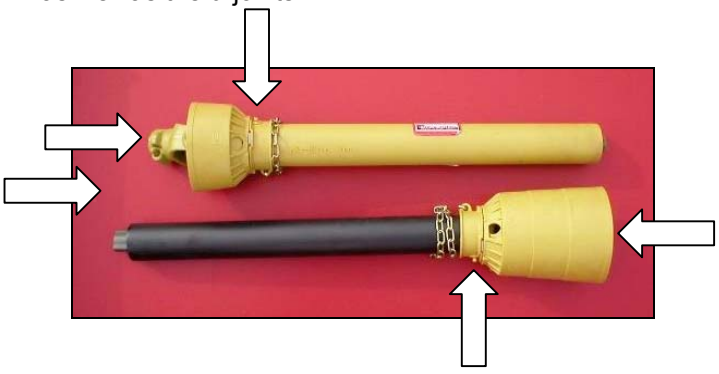

Inspection and Replacement of Blades

The mowing blades on the Hardee mower are designed and made to exact specifications and should be replaced with only original Hardee parts. Always replace blades in pairs to retain balance on the blade holder. Never weld the blades, as this will change the temper of the steel. Never modify the blades. Check for cross sectional thickness (5/8") and deterioration of blades. Replace as necessary.

When the replacement of mower blade is required, a few rules should be followed:

- Replace blades in pairs.
- Inspect bolt holes.
- If bolt holes are elongated, replace blade holder. *See instructions below.*
- Cutting heavy brush causes excess stress on the blade bolts, because of this they will require inspection that is more frequent.
- When replacing blades always replace bolts and nuts. Never reuse blade bolts and nuts.

Inspection and Replacement of Blade Holder

Inspection

✓ First, completely extend boom. Rotate mower deck all the way up; drop boom until deck rests on ground. Switch off tractor, secure parking brake and remove key.

✓ When inspecting, pay particular attention to any small hairline cracks between spindle bolt hole and blade bolt holes. This indicates metal fatigue from severe abuse and holder must be replaced.

✓ Blade and spindle bolts and nuts should be checked daily.

Replacement

✓ Remove cotter pin and castle nut.

✓ With an assistant, carefully remove the blade holder.

✓ Then position the new blade holder in place.

✓ Replace the castle nut and cotter pin. *See parts breakdown drawing on page 37 for reference.*

Checking the Mower Head Relief Valve

The LR50148 is equipped with a mowerhead relief valve that comes pre-set from the factory. This valve is installed in the side of the manifold and identified with the number "3“. Before checking the pressure on the valve, make certain that a clean filter is installed and that the reservoir contains the correct amount of hydraulic oil.

The procedure to check the pressure on the mower head relief is as follows:

✓ Start the tractor and with the tractor in park, place the mowerhead on the ground. Engage the tractor PTO to power the mower head and increase engine speed until 800 (Max. 1000) PTO RPM is reached. Allow the mower to run at this speed for 3 to 5 minutes.

✓ Disengage the PTO and stop tractor engine.

✓ Remove the motor pressure line (“MP”) and plug it. Install a 5000 psi pressure gauge into the 4-M-SAE outlet (“GP”) adjacent to the relief valve. Place the loose pressure line in a clean container to catch any spillage.

Caution

Be sure all fittings are tight before proceeding!

✓ Start the tractor engine and increase engine speed to 1200 **ENGINE** RPM. Engage tractor PTO and immediately observe the pressure reading and disengage tractor PTO. (If pressure reads 2700 psi (+/- 150 psi), you may proceed.)

✓ Increase tractor engine speed to 800 (Max.1000) PTO RPM. Engage tractor PTO and immediately observe the pressure reading and disengage tractor PTO.

The correct pressure setting is 2700 psi. If the reading is less than 2550 or more the 2850, contact your local Hardee dealer for assistance.

Caution

Never let the unit operate in the capped position for over 5 seconds. A reading can be obtained accurately in this amount of time.

✓ Now you can remove the cap and gauge, and re-install the pressure line.

CAUTION

Never vary from the 2700-psi mowerhead pressure. Failure to comply with this specification will cause severe hydraulic heat, loss of power and damage to components.

DANGER

Exceeding 2700 psi will cause premature hose failure (rupture), and possible bodily injury or property damage.

Cylinder Speeds

The LR50148 is equipped with a "Proportional Control" feature in the main control valve that allows the operator to control the piston speed of individual cylinders with the amount of movement on the thumb actuated joysticks.

Adjusting the Cylinder Control Valve

The LR50148 comes from the factory with the cylinder control valve pre-set at the proper pressures. There is a main relief (Item P), and seven individual cylinder counterbalance valves (Items 5D2; 5D1; 5C2; 5C1; 5B2; 5B1; 8A2; 8A1). *The chart on page 18 lists the proper settings for these valves.*

The procedure for checking the pressures on the cylinder control valve is as follows:

Cylinder Relief Valve (ITEM P)

- ✓ Rest the deck of the LR50148 on the ground to relieve all pressures on the hydraulic lines.
- ✓ With the tractor engine off and parking brake set, remove the hydraulic test port plug *(see page 19 for gauge port locations)*. Install a 5000 psi pressure gauge with a SAE 4-M-ORB fitting into the hydraulic test port and place the gauge where you can easily see it from a safe distance.
- ✓ Start the tractor and bring the engine up to operating speed 800 (Max.1000) PTO RPM. Activate the joystick, raise the mower deck off the ground, and swing the boom so that it is straight behind the tractor.
- ✓ Activate the joystick in the "HEAD UP" position until the deck cylinder fully retracts. Continue to hold the joystick in this position for not more than 5 seconds at a time, and have someone read the pressure on the gauge.

WARNING

While reading the gauge, be careful not to stand in an area where inadvertent movement of the booms could trap or crush you. If you fail to heed this warning, **SERIOUS INJURY OR DEATH COULD OCCUR**.

The correct pressure setting for the cylinder relief is 2500 psi.

To increase or decrease pressure, insert a 1/4" allen-wrench into the adjusting stem at the top of the valve. Loosen the 3/4" lock nut at the base of the stem slightly, and then turn the adjusting stem to make your pressure change. Re-tighten the stem lock nut

Note: *The allen-head adjusting stem increases pressure when turned clockwise and decreases pressure when turned counterclockwise. Pressure increases or decreases rapidly with only a slight movement. Move adjusting stem in increments of 1/4 turn or less.*

CAUTION

NEVER attempt to adjust the valve when in the "on" (loaded) position. Always make adjustments in the "off" (neutral) position with the tractor engine turned off.

When 2500 psi is obtained, retighten the jam nut. Then re-test the pressure to be sure 2500 psi is retained.

- ✓ When the adjustment is complete, rest the cutter deck back on the ground to relieve pressure in the hydraulic lines. Remove the pressure gauge and re-install the hydraulic test port plug.

Individual Cylinder Counterbalance Valves (5D2; 5D1; 5C2; 5C1; 5B2; 5B1; 8A2; 8A1;)

Each cylinder has counterbalance valves that provide both work port relief and load control. These valves are 100% inspected and pre-set from the factory to ensure the proper settings. Do not alter the settings on these valves.

If you need assistance, contact your local Hardee dealer.

LR50148 CONTROL VALVE PORT LISTING

Item	EVH P/N		Description	Code	Setting	Torque	Coil Nut
A	16262	Stem	Solenoid Valve (Deck Cyl. Control)	4A		25 ft lbs.	2.5 ft lbs.
	16263	Coil					
B	16262	Stem	Solenoid Valve (II stg Boom Control)	4B		25 ft lbs.	2.5 ft lbs.
	16263	Coil					
C	16262	Stem	Solenoid Valve (I stg Boom Control)	4C		25 ft lbs.	2.5 ft lbs.
	16263	Coil					
D	16262	Stem	Solenoid Valve (Swing Control)	4D		25 ft lbs.	2.5 ft lbs.
	16263	Coil					
E	16258		Counterbalance Valve (Swing Right)	8A1	1300 PSI	35 ft lbs.	
F	16258		Counterbalance Valve (Swing Left)	8A2	1300 PSI	35 ft lbs.	
G	16256		Counterbalance Valve (1st Stage Up)	5B1	2500 PSI	35 ft lbs.	
H	16256		Counterbalance Valve (2nd Stage Down)	5C1	1800 PSI	35 ft lbs.	
I	16256		Counterbalance Valve (2nd Stage Up)	5C2	3300 PSI	35 ft lbs.	
J	16256		Counterbalance Valve (Deck Down)	5D1	1800 PSI	35 ft lbs.	
K	16257		Counterbalance Valve (Deck UP)	5D2	3300 PSI	35 ft lbs.	
L	16523	Stem	Proportional Flow Control	2		50 ft lbs.	2.5 ft lbs.
	16524	Coil					
M	16259		Cylinder Relief Valve	7	2500 PSI	25 ft lbs.	
N	N/A		Check Valve	13		130 ft lbs.	
O	16260	Stem	Solenoid Valve (Deck Motor Control)	9		22 ft lbs.	
	16261	Coil					
P	16255		Main Relief	3	2700 PSI	37 ft lbs.	
Q	N/A		Pilot Opp. Dir. Valve	6		80 ft lbs.	2.5 ft lbs.
R	N/A		Return Port	T			
S	N/A		Pump Port	P			
T	N/A		Deck Motor Pressure Port	MP			
U	N/A		Deck Motor Return Port	MPR			
NOT SHOWN	16496		MAIN CONTROLLER				
NOT SHOWN	16278		JOYSTICK WITH WIRE HARNESS				
NOT SHOWN	16249		PROX SENSOR FOR SWING				
NOT SHOWN	16497		HITCH FRAME WIRING HARNESS FOR MAIN CONTROLLER				
NOT SHOWN	16637		Single Micro Joysticks for 16278 Joystick				
NOT SHOWN	16181		Wire Harness for HR2360/LR50160 16278 Joystick				

CONTROL VALVE PORT SCHEMATIC

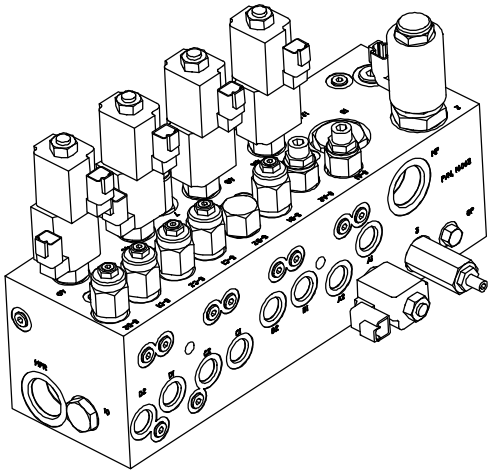

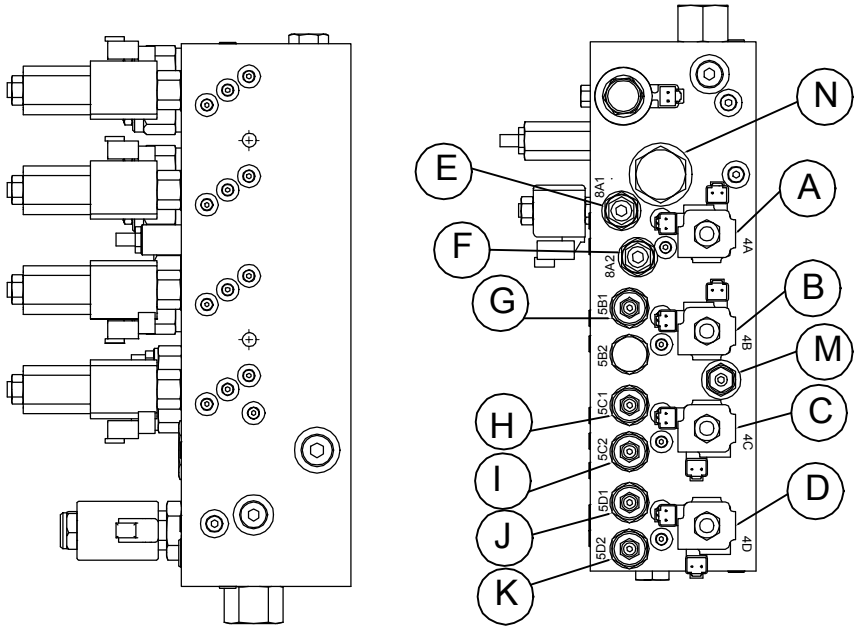

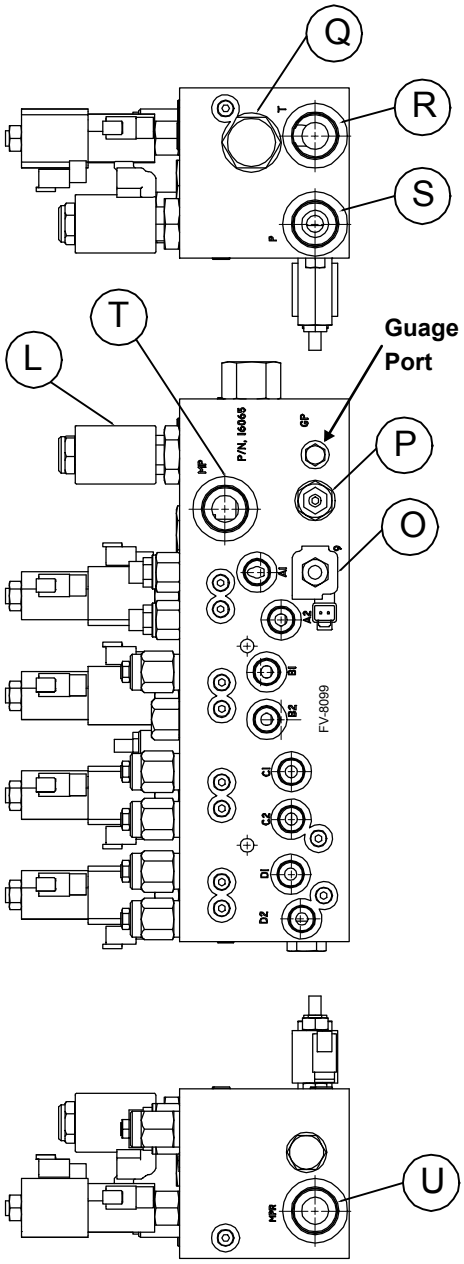

LR50148 Valve / Joystick Wiring Schematic					
Function	**Valve Port**	**Coil**	**Wire Color (+)**	**Connector No.**	**Handle Position**
Swing (Boom) Right	8A1	A - Top	White	C10	Right (E)
Swing (Boom) Left	8A2	A - Bottom	White	C9	Left (W)
1st Stage Up	5B1	B - Top	White	C17	Up (N)
1st Stage Down	5B2	B - Bottom	White	C16	Down (S)
2nd Stage Down	5C1	C - Top	White	C12	Down (S)
2nd Stage Up	5C2	C - Bottom	White	C11	Up (N)
Deck Down	5D1	D - Top	White	C15	Left (W)
Deck Up	5D2	D - Bottom	White	C14	Right (E)
Deck Motor	9	O	Black	C19	Any
Proportional Control	2	L	Black	C20	Any

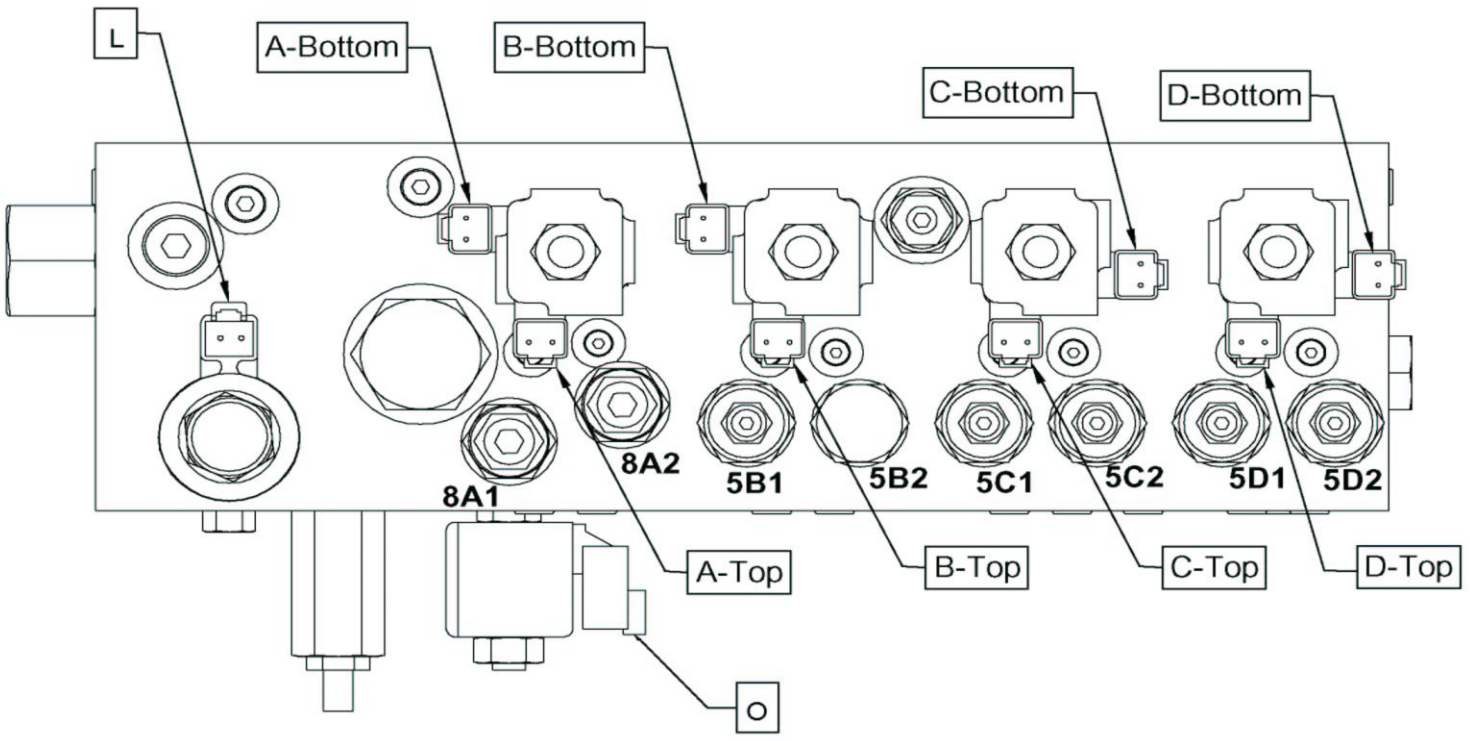

Routine Maintenance Checklist

Interval	Item	Check	Lube	Change	Comments
Daily Or 10 Hours	Pump Drive Shaft		•		
	Pivot Points		•		
	Grease Fittings		•		
	Hydraulic Fluid Level	•			
	Blades	•			Change If Damaged
	Blade Bolts (Blade To Blade Holder)	•			Torque to Spec. on Blade Holder Breakdown
	Blade Holder Nut	•			Torque to Spec. on LR50148 - Parts Breakdown
	Spindle Bolts (Spindle To Deck)	•			
	Main Frame And Deck Bolts	•			
	Rubber Shielding	•			Change If Damaged
Weekly Or 50 Hours	Hydraulic Return Filter			•	Change After 1st 50 Hours, Then Every 500 Hours
	Hydraulic Fittings	•			
Monthly Or 150 Hours	Tank Breather	•			
	Hydraulic Fluid Level	•			
Seasonal Or 500 Hours	In Tank And Return Hydraulic Filters			•	

Troubleshooting Guide

Hydraulic System, Blade System, Pump, Motor, Fluid Lines

Problem	Possible Cause	Solution / Correction
Cylinder Will Not Operate	No Power To Joystick	Repair / Replace Connections
	Fuse Blown Inside Lighter Plug	Replace Fuse
	Joystick Not Connected To A 12-Volt System	Connect To 12-Volt Power Supply
	Joystick Not Connected To Valve	Examine Bulkhead Connection To Mower
	Proportional Valve Not Functioning	Repair Electrical Connections To Solenoid Or Replace Solenoid
Head Drifts Back When In Operation	Improper Counter Balance Valve Setting	Adjust Counter Balance Valves To Specifications (Refer To Pages 18 - 19)
	Cylinder Leakage	Repair / Replace Cylinders
Boom Drifts Down	Improper Counter Balance Valve Setting	Adjust Counter Balance Valves To Specifications (Refer To Pages 18 - 19)
	Cylinder Leakage	Repair / Replace Cylinders
Leaking Motor	Motor Seal Blown	Repair / Replace Seal And Check Filter For Blockage (Repair / Replace Filter)
Blades Loose Speed In Mowing	Improper Relief Valve Setting	Check Relief Valve Setting (Refer To Pages 18-19)
		Repair / Replace Relief Valve
	Proportional Valve	Check for trash or Replace
	Poppet Valve in Motor	Check/Replace Poppet valves in motor
Pump Whines	Worn Or Damaged Pump	Repair / Replace Pump (Make sure gate valve is open)
	Improper Oil In System	Replace Oil
		Requires Hardee Oil Part NO 23333 Or Comparable Oil With Proper Viscosity
	Pressure Setting On Relief Valve Too Low	Check Relief Valve Setting (Refer To Pages 18-19)
Motor Whines	Worn Or Damaged Motor	Repair / Replace Motor
	Improper Oil In System	Replace Oil
		Requires Hardee Oil Part NO 23333 Or Comparable Oil With Proper Viscosity
	Pressure Setting On Relief Valve Too Low	Check Relief Valve Setting (Refer To Page 18)
Motor Seal Continually Blows Out	Internal Poppet Valve Damaged	Replace Poppet Valves
Unit Vibrates Severely	Broken Blade	Replace Blades, Blade Bolts And Nuts (Refer To Page 16)
	Mismatched/Unbalanced Blades	Refer to Page 16
	Blade Holder Loose	Repair / Replace Blade Holder (Refer To Page 16)
	Loose Output Shaft	Repair / Replace Shaft's Bearings In Mower Head Housing
Mower Head Grinds And Roars When Operating	Worn Bearings Or Improper Lubrication In Mower Hydraulic Motor Housing	Repair / Replace Components (Bearing, Seals And Housing) As Required

Troubleshooting Guide, continued

Hydraulic System, Blade System, Pump, Motor, Fluid Lines

Problem	Possible Cause	Solution / Correction
Individual Cylinders Leak Down	Blown Or Worn Cylinder Packing	Repair / Replace Cylinder
Relief Valve Will Not Adjust To Specifications	Defective Or Worn Valve Seat	Repair / Replace Relief Valve And Adjust To Specifications
	Worn Pump	Replace Pump
	Gate Valve Closed	Open Gate Valve
	Hydraulic Valve Cracked Internally	Repair / Replace Valve
	Improper Oil	Repair / Replace Oil (Use Hardee Oil Part No. 23333)
No Power To Control Box	No Power To Joystick / Joystick Not Connected To A 12-Volt System	Connect To 12-Volt Power Supply
	Improper Connection To Joystick	Repair / Replace Connections
	Fuse Blown Inside Cigarette Lighter Plug	Replace Fuse
Filter Gauge Is In The Red At All Times	Filter Restricted	Repair / Replace Filter
	Bad Gauge	Repair / Replace Gauge
	Hydraulic Oil Too Heavy For Region Or Climate	Replace Oil
PTO Shaft Won't Telescope	PTO Shaft Not Lubed Properly	Lube Driveshaft (Per Daily Routine Check Sheet On Page 15)
	Bent Shaft	Replace PTO Shaft
Excessive Slack In Boom Hinges	Pins Worn	Repair / Replace Pins
Beams Squeak When Operating	No Lubrication Or Improper Lubrication	Lube Hinge Points (Per Instructions On Page 15)
	Defective Lube Fittings	Repair / Replace Fittings
Boom Operates Erratically	Speed Is Too Fast	Call HARDEE Dealer
	Defective Controller	Check Blink Codes on Page 24
	Air In Lines	Purge Hydraulic Lines
	Proportional Valve	Trash in Valve
Blades Won't Start-Up	Oil Flow Restricted	Open Gate Valve
		Repair / Replace Hydraulic Lines
		Replace In-Tank Filter
	Blade Off/On Switch or Electric Circuit	Check for 12-volts at Coil
	Proportional Valve	Trash in Valve
		Check Coil

Fault Codes for Status LED

Blink Code	*Reason for Fault*	*Corrective Action*
21	Left Joystick X axis Voltage out of range	Check Joystick and wires
22	Left Joystick Y axis Voltage out of range	Check Joystick and wires
23	Right Joystick X axis Voltage out of range	Check Joystick and wires
24	Right Joystick Y axis Voltage out of range	Check Joystick and wires
25	Left X axis No cal	Recalibrate the Joysticks
26	Left Y axis No cal	Recalibrate the Joysticks
27	Right X axis No cal	Recalibrate the Joysticks
28	Right Y axis No cal	Recalibrate the Joysticks
31	Stage 1 Down/Stage 2 Down Output Open or Short Circuit	Check valve coil and wires
32	Proportional Unloader Output Open or Short Circuit	Check valve coil and wires
33	Head Down/Swing Right Output Open or Short Circuit	Check valve coil and wires
34	Head Up/Swing Left Valve Output Open or Short Circuit	Check valve coil and wires
35	Cutter Head Motor Valve Output Open or Short Circuit	Check valve coil and wires
36	LED Output Open or Short Circuit	Check valve coil and wires
37	Stage 1 Up/Stage 2 Up Output Open or Short Circuit	Check valve coil and wires
38	Relay Driver Output Open or Short Circuit	Check relay and wires

How to interpret the "BLINK CODE":

On the bottom of the Controller Box, locate two (2) LED's; one Red; one Green. Whenever the red LED lights up you may see the following "BLINKS":

- (2) Red "BLINKS" – pause – (1) Red "BLINK" = "BLINK CODE" 21
- (3) Red "BLINKS" – pause – (6) Red "BLINKS" = "BLINK CODE" 36

ETC.

- Now check "Reason for Fault" and "Corrective Action" opposite the corresponding "BLINK CODE".

MC024-020-00000 PLUS+1 CONTROLLER

Dimensions and Pin Assignment

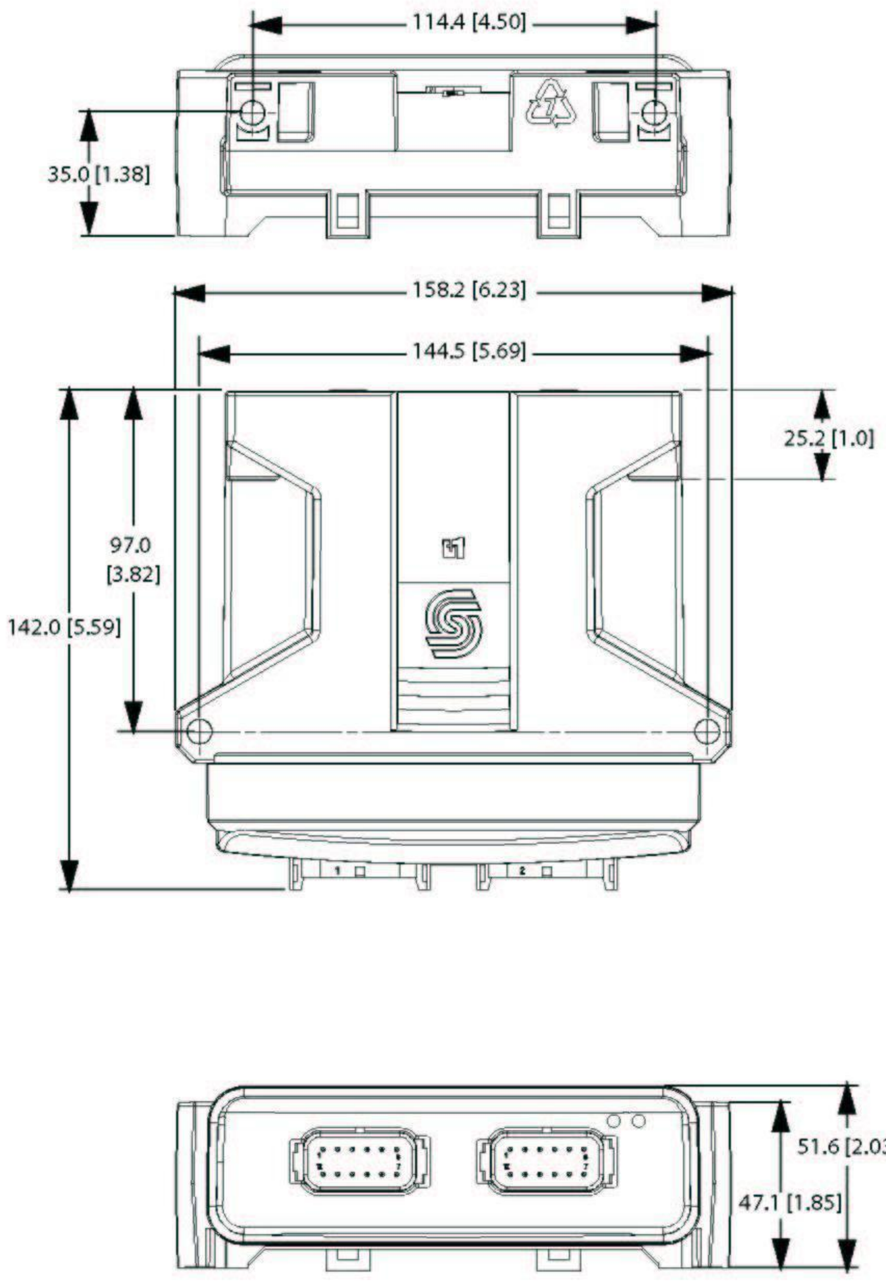

MC024-020-00000 mounting dimensions

DIN/AIN/FreqIN	C2-P1
DIN/AIN/FreqIN	C2-P2
PWMOUT/DOUT/PVG Power supply 1	C2-P3
PWMOUT/DOUT/PVG Power supply 2	C2-P4
PWMOUT/DOUT/PVGOUT 1	C2-P5
PWMOUT/DOUT/PVGOUT 1	C2-P6
PWMOUT/DOUT/PVGOUT 1	C2-P7
PWMOUT/DOUT/PVGOUT 2	C2-P8
PWMOUT/DOUT/PVGOUT 2	C2-P9
PWMOUT/DOUT/PVGOUT 2	C2-P10
Power Supply +	C2-P11
Power Supply +	C2-P12

Power ground -	C1-P1
Power supply +	C1-P2
CAN +	C1-P3
CAN -	C1-P4
AIN/CAN shield	C1-P5
DIN	C1-P6
DIN	C1-P7
5 V DC sensor power +	C1-P8
Sensor power ground -	C1-P9
DIN/AIN/FreqIN	C1-P10
DIN/AIN/FreqIN	C1-P11
DIN/AIN/FreqIN	C1-P12

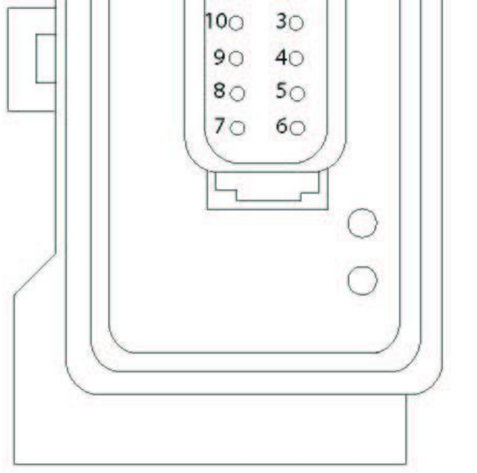

MC024-020-00000 24 pin connector

Specifications

Product Parameters	
Supply voltage:	9 to 36 V
Operating temperature (ambient):	-40 to 70° C
Storage temperature:	-40 to 85° C
IP rating:	IP 67
EMI/RFI rating:	100 V/M
Weight:	0.40 kg (0.88 lb)
Vibration:	IEC 60068-2-64
Shock:	IEC 60068-2-27 test Ea
Maximum current, sourcing:	24 A
Maximum current, sinking:	8 A

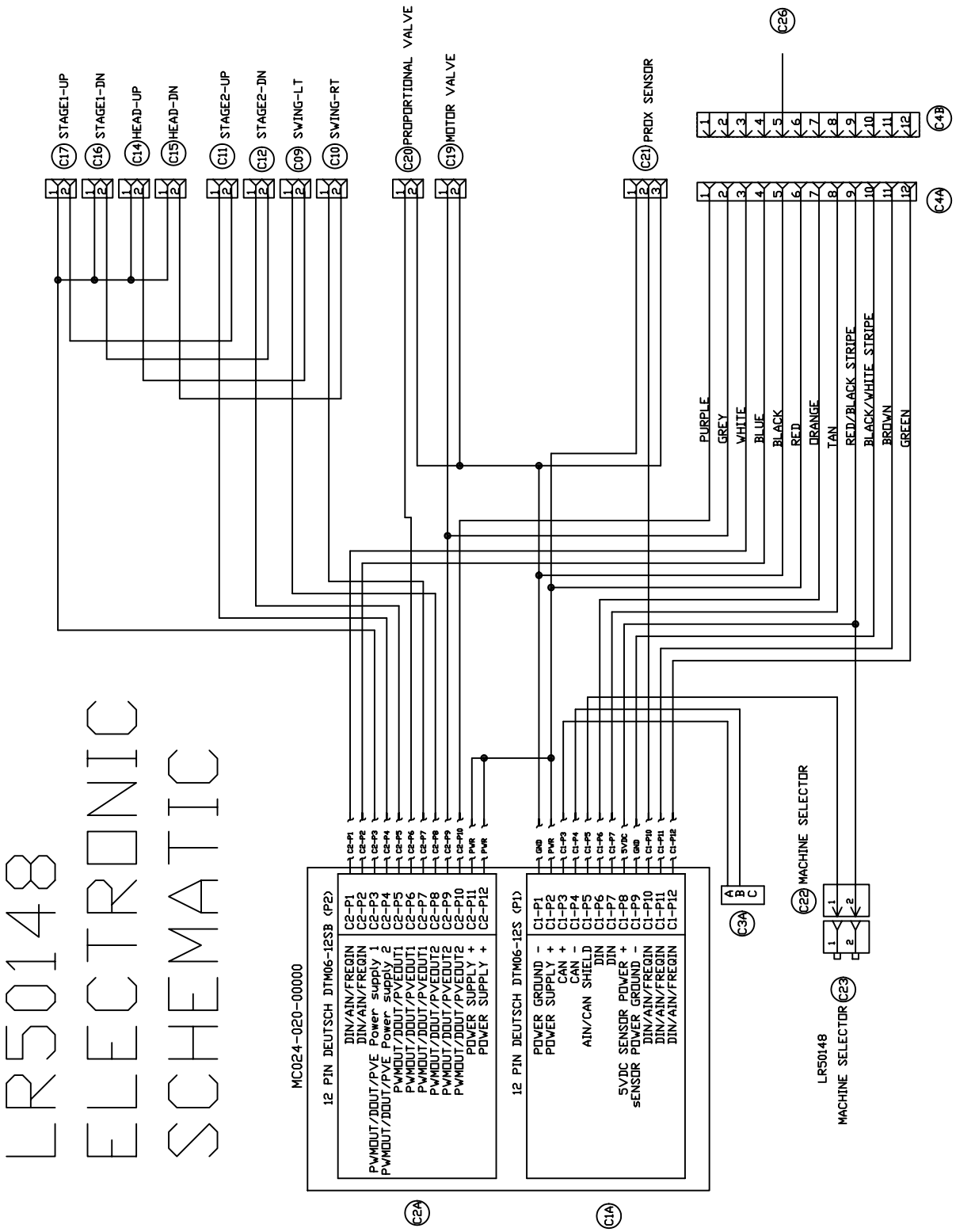
LR5148
ELECTRONIC
SCHEMATIC
C17 STAGE1-UP
C16 STAGE1-DN
C14 HEAD-UP
C15 HEAD-DN
C11 STAGE2-UP
C12 STAGE2-DN
C09 SWING-LT
C10 SWING-RT
C20 PROPORTIONAL VALVE
C19 MOTOR VALVE
C21 PROX SENSOR
C26
C48
C44
PURPLE
GREY
WHITE
BLUE
BLACK
RED
ORANGE
TAN
RED/BLACK STRIPE
BLACK/WHITE STRIPE
BROWN
GREEN
MC024-020-00000
12 PIN DEUTSCH DTM06-12SB (P2)
C2-P1 DIN/AIN/FREQIN
C2-P2 DIN/AIN/FREQIN
C2-P3 PVMOUT/DOUT/PVE Power supply 1
C2-P4 PVMOUT/DOUT/PVE Power supply 2
C2-P5 PVMOUT/DOUT/PVEOUT1
C2-P6 PVMOUT/DOUT/PVEOUT1
C2-P7 PVMOUT/DOUT/PVEOUT2
C2-P8 PVMOUT/DOUT/PVEOUT2
C2-P9 PVMOUT/DOUT/PVEOUT2
C2-P10 POWER SUPPLY +
C2-P11 POWER SUPPLY +
C2-P12
C2A
12 PIN DEUTSCH DTM06-12S (P1)
C1-P1 POWER GROUND -
C1-P2 POWER SUPPLY +
C1-P3 CAN +
C1-P4 CAN -
C1-P5 AIN/CAN SHIELD
C1-P6 DIN
C1-P7 DIN
C1-P8 5VDC SENSOR POWER +
C1-P9 sENSOR POWER GROUND -
C1-P10 DIN/AIN/FREQIN
C1-P11 DIN/AIN/FREQIN
C1-P12 DIN/AIN/FREQIN
C1A
C3A
C22 MACHINE SELECTOR
LR50148
MACHINE SELECTOR C23

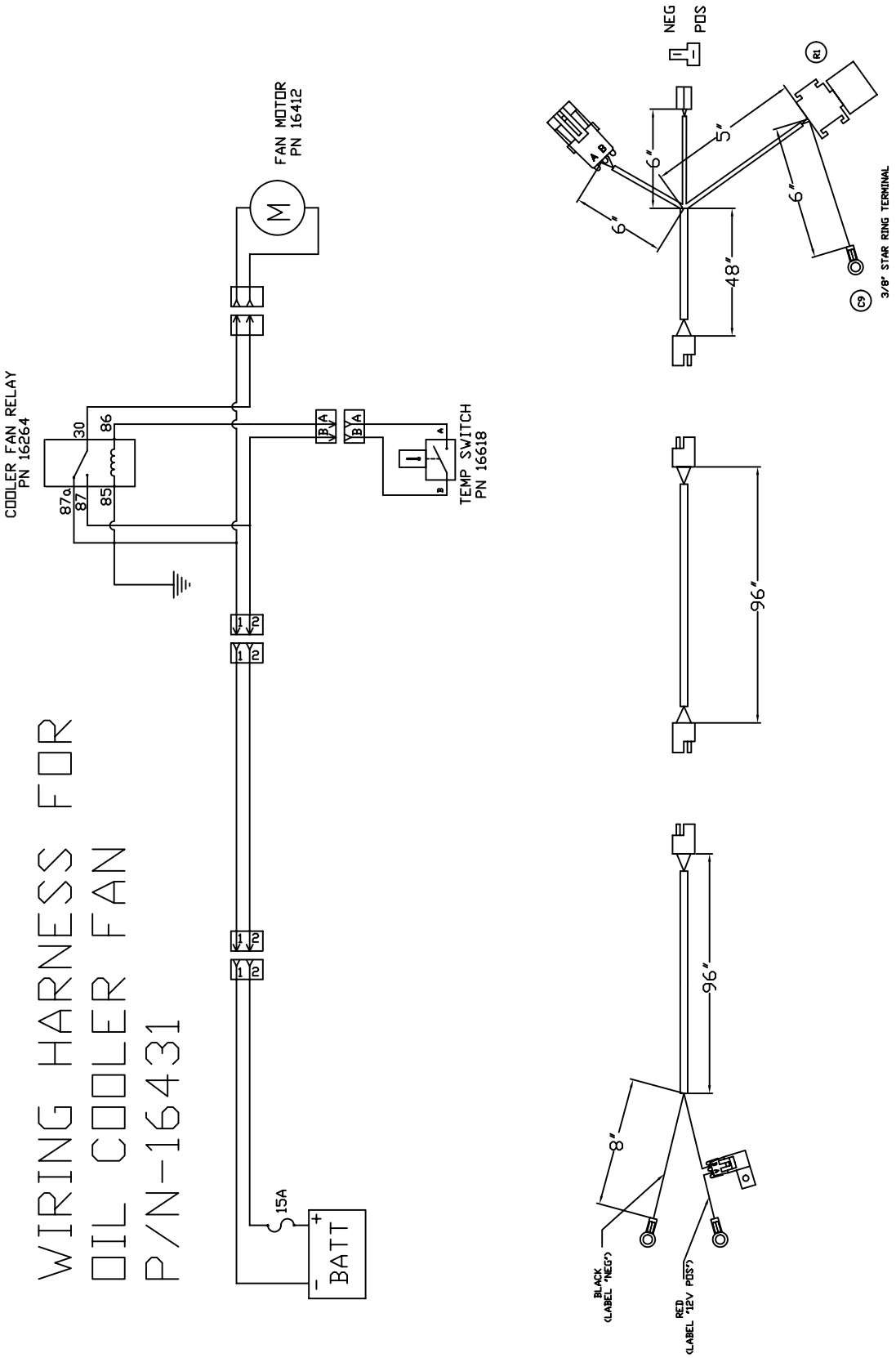
WIRING HARNESS FOR
OIL COOLER FAN
P/N-16431
FAN MOTOR
PN 16412
COOLER FAN RELAY
PN 16264
30
86
87a
87
85
TEMP SWITCH
PN 16618
15A
BATT
NEG
POS
6"
5"
6"
6"
48"
3/8" STAR RING TERMINAL
96"
96"
8"
BLACK
(LABEL "NEG")
RED
(LABEL "12V POS")

Summary of Specifications

Model	LR50148
Approximate Weight (lbs.)	Approximately 3,085 lbs. - Ready To Mow
Blade Tip Speed (ft/min)	540 PTO – 15,210 ft/min with pump # 22758 1,000 PTO – 15,320 ft/min with pump # 22759
Blades	Heavy 1/2” Thick - Free Swinging
Mowing Capacity / Suggested Usage	Grass, Heavy Brush Up To 4” In Diameter
Mowing Width	48”
Deck Height	8 1/8”
Deck Thickness	10 Gauge
Driveline	Category 3
Driveline Protection	Hydraulic Relief Valve
Hitch	Standard Hitch, Category 2 Or 3 Quick Hitch
Motor	Hydraulic Vane Motor
Overall Length	260”
Overall Width	68”
Transport Width	86”
PTO Operating Speed	540 OR 1000 RPM
Pump	Hydraulic Spring Loaded Vane Pump
Rubber Shielding	Standard – Front & Rear
Skids	Standard – Weld On
Tractor HP Required	80 And Up
Hydraulic Oil System Capacity	35 Gallons
Controls	Tethered/Pendant Joystick Grip

LR50148 Complete

DWG. NO.	25925	REV.	A

REV	CHANGE	BY	DATE	ECN
IR	INITIAL RELEASE	TBB	10/23/15	1635
A	Stand Weldment Replaced (23160 was 23038)	TBB	1/19/16	1620

Item	Part Number	Qty.	Description
1	10002	2	Hex Bolt, 1/4"-20 X 1" Gr.5 Plated
2	10006	6	Hex Bolt 1/4" x 3" gr.5 plated
3	10031	13	Hex Bolt 3/8 x 1 gr.5 plated
4	10032	1	Hex Bolt 3/8 x 1-1/2 gr.5 plated
5	10034	2	Hex Bolt 3/8" x 2-1/2" gr.5 plated
6	10041	2	HEX BOLT (3/8" X 6" GR. 5 PLATED)
7	10071	6	Hex Bolt 1/2 x 1 gr.5 plated
8	10072	2	Hex Bolt 1/2 x 1 1/2 gr.5 plated
9	10092	4	Hex Bolt 5/8 x 2 gr.5 plated
10	10093	2	Hex Bolt 5/8" x 2-1/2" gr.5 plated
11	10111	4	Hex Bolt 3/4"-10 X 2" gr.5 Plated
12	10135	2	HEX BOLT(M6x1x20MM GR.5 ZINC)
13	10153	6	Lock Nut, 1/4" Plated
14	10154	1	Lock Nut 5/16"-18 Plated
15	10166	12	Lock Nut 5/8"-11 plated
16	10168	14	3/4"-10 Locknut (Gr.5 Plated)
17	10175	13	3/8"-16 Locknut (Gr.5 Plated)
18	10176	8	1/2" Locknut (Gr.5 Plated)
19	10181	1	Lockwasher 5/16" plated
20	10184	4	Lockwasher 1/2 plated
21	10185	10	Lockwasher 5/8" Plated
22	10186	10	Lockwasher 3/4" Plated
23	10200	6	1/4" Plated Flatwasher
24	10202	25	3/8" Flatwasher (Plated)
25	10204	20	1/2 Flatwasher (Plated)
26	10206	8	Flatwasher 3/4 plated
27	10207	23	Flatwasher, 1" plated
28	10252	12	Cotter Pin 3/16" X 2" Plated
29	10335	1	Hardee Red Paint - (Not Shown)
30	10336	1	Gear Oil [85W-140] - (Not Shown)
31	10339	2	Pop Rivet
32	10346	2	3 pt. Snap Pin (Lynch Pin)
33	10368	1	1-1/4" Gate Valve
34	10373	1	Hydraulic Oil
35	10387	2	O-ring
36	10388	1	O-Ring
37	10390	3	Clip Pin (1/8 x 2)
38	10393	3	Universal Clip Pin
39	10419	2	Hitch Pin, Cat. 2 & 3, Clevis Style
40	10448	2	CYLINDER, 3 X 17"
41	10454	1	CYLINDER, 4 X 24"
42	10501	1	FLOW EZY BREATHER
43	10538	2	Sleeve for 10419 Pin
44	10582	1	PRESSURE HOSE 3/8" X 55" W/6-F-JIC
45	10583	1	3/8" SAE 100 R1 X 125" W/6-F-JIC
46	10584	1	PRESSURE HOSE 3/8" X 210" W/6-F-JIC
47	10585	2	PRESSURE HOSE 3/8" X 83" W/6-F-JIC
48	10587	1	PRESSURE HOSE 3/4" X 106" W/12-M-JIC
49	10646	1	Grease
50	10866	1	1" X 106" Pressure Hose
51	10872	4	Pressure Flange SET
52	11005	1	Decal, Warning - Thrown Objects
53	11010	3	Large Hardee Logo Decal
54	11032	1	Small Hardee Logo Decal
55	11675	1	Return Filter Assembly
56	11727	1	Serial Number Plate
57	11850	1	Web Site Decal
58	11860	10	TIE STRAP, (14" LG.) (100/PK)
59	13535	4	STAINLESS STEEL CLAMP, 1-1/2" TO 1-3/4"
60	13563	1	1-1/4"-M-NPT X 1-1/2" Metal Hose Barb
61	13632	1	1/4" NPT Metal Cap
62	13697	1	1-1/4" NPT Female Threaded Elbow
63	13758	1	20-M-NPT X 16-F-NPT Reducer
64	13778	1	1-1/4" X 3-1/2" Long NPT Nipple
65	13902	8	STRAIGHT, 6-M-JIC X 8-M-ORB
66	13905	8	6-M-JIC X 8-M-NPT 90 Deg. Elbow
67	13974	1	16-M-JIC X 16-M-NPT 90 Deg. Elbow
68	15241	1	Hydraulic Vane Motor
69	15251	2	1" Hose Clamp Body (SET OF 2)
70	15252	1	3/4" Hose Clamp Body (SET OF 2)
71	15255	3	Hose Clamp Cover Plate
72	15256	2	Hex Bolt (1/4" X 2-3/8" Gr. 5 Plated)
73	15326	1	Pressure Hose 3/8" X 17" Lg. W/ 6-F-JIC Both Ends
74	15338	1	Danger Decal, Exposed Blades
75	15339	1	PRESSURE HOSE 3/8" X 32" W/6-F-JIC
76	15466	2	Tubing Insert, 3-1/2" Sqr. X 11
77	15481	1	Slotted Hex Nut 1-1/4" -18UNEF
78	15845	1	Hydraulic Decal Kit
79	15845-1	1	DANGER DECAL (KIT 15845)
80	15845-10	1	WARNING DECAL (KIT 15845)
81	15845-11	1	WARNING DECAL (KIT 15845)
82	15845-15	1	DANGER DECAL (KIT 15845)
83	15845-16	2	DANGER DECAL (KIT 15845)
84	15845-9	1	WARNING DECAL (KIT 15845)
85	15852	2	Red Reflector Decal
86	15853	2	Yellow Reflector Decal
87	15854	1	Manual Holder
88	15860	2	U-Nut, 1/4"-20
89	15910	46	HOSE SLEEVE
90	15928	1	Cylinder, 4" X 24" W/ 2" Rod & 1" Pins
91	15968	1	Cotter Pin 1/4" x 3"
92	16065	1	CONTROL VALVE & Joy Stick Kit
93	16067	1	PUMP - VALVE HOSE
94	16068	1	HOSE ASSY. VALVE TO TANK
95	16070	8	3/8" - 90DEG. SWIVEL NUT
96	16071	1	PRESSURE HOSE 3/8" X 192" W/6-F-JIC
97	16077	3	Straight Fitting - 1"
98	16084	2	Swivel Nut Run Tee - 37 Deg. Flare
99	16086	1	Reducer 37 Deg. Flare (16-12 TRTXN-S)
100	16100	1	Sight Gauge 5", With Thermometer
101	16138	2	Lock Nut 7/16"-14 NC with Nylon Insert
102	16191	2	16-M-JIC X 16-M-NPT 90 Deg. Elbow
103	16249	1	PROX SENSOR
104	16278	1	Joystick Assembly (Not Shown)
105	16335	1	Hour Meter - not for resale
106	16353	2	16 M-JIC - 12 MORB Elbow
107	16354	1	Fitting, 16-M-ORB/16-F-JIC0
108	16379	1	HYDRAULIC HOSE, 1" - OIL
109	16390	1	HYD. HOSE, 1" 5 PSI RELIEF - OIL FILTER
110	16392	1	PRESSURE HOSE 3/4" X 143" LG
111	16393	1	PRESSURE HOSE 1" X 153" LG
112	16404	1	CHECK VALVE- INLINE 5 PSI
113	16431	1	WIRING HARNESS, Oil Cooler
114	16436	1	Clamp, 1/2" Plated Steel Loom
115	16496	1	CONTROLLER, MC 024 020 for 16065
116	16519	4	HEX BOLT, 12MM X 1.75 X 35
117	16579	1	Hydraulic Motor Housing Assembly
118	16617	1	OIL COOLER
119	16618	1	TEMPERATURE SWITCH
120	16717	3	DECAL, MODEL LR50148
121	20031	1	Access Cover
122	22691	1	LR40148 / LR50148 Front Corner Belting
123	22751	1	Short Belting Flat
124	22770	1	LR40148 / LR50148 Belting Extension Kit
125	22789	1	LR40148 / LR50148 Deck Weldment (6 Bolt)
126	22799	1	LR40148 / LR50148 Rubber Belting Kit
127	22803	1	Blade Holder w/Blades
128	22833	2	Fluid Connector
129	23130	1	Pivot Sleeve
130	23131	1	End Cap Weldment
131	23160	2	Stand Weldment, 17-7/8" Tall
132	23232	1	Support Brace
133	23280	1	WELDMENT, Cylinder Breakaway
134	23287	2	Boom To Deck Bracket Weldment
135	23290	2	WELDMENT, Boom to Deck Bracket, 21"
136	23292	1	PIN WELDMENT (1" x 5" LG)
137	23294	1	1st Stage Boom
138	23310	1	2nd Stage Boom
139	23320	1	Cylinder Mount Weldment
140	23325	1	WELDMENT, Weight Box
141	23335	1	Weldment, Oil Tank
142	23340	1	Stand Weldment
143	23345	1	Head Mounting Bracket Weldment
144	23349	1	Outer Hose Guard Weldment
145	23352	1	Inner Hose Guard Weldment
146	23355	1	WELDMENT, GUARD
147	23361	2	Spacer, 1" X 2-1/8"
148	23363	2	SPACER (1" SCH 40 Pipe x 5/8")
149	23379	2	1-1/4" X 9" Pin Weldment for LR's
150	23380	1	WELDMENT, 1" x 6 1/4" PIN
151	23434	5	Pin Weldment
152	23457	2	COLLAR, for 23379 PIN (Bushing)
153	25117	2	Spacer
154	25724	5	WELDMENT, Cylinder Pin
155	25725	1	WELDMENT, Hardee Logo
156	25798	1	Hose, Suction (1-1/2" x 36")
157	25857	1	WELDMENT-OIL COOLER SUPPORT
158	25930	1	ASSEMBLY Hitch Frame, LR50160 / LR50148
159	26855	1	WELDMENT - FAN GUARD FOR OIL COOLER

SECTION 8 - REPLACEMENT PARTS

Note:

This list of components is strictly to be viewed as a "BILL OF MATERIALS" of the "COMPLETE" mower. It is not related to any illustration.

All Dimensions in Inches Unless Otherwise Specified
Dimensions in [ ] are in Millimeters
Tolerance Unless Otherwise Specified
Fractional Dimensions ± 1/16" Decimal Dim. to Limits Shown
Angular Dimensions ± 1° All Holes to be +0 -1/32"

MODELED BY	TBB	10/23/15
DRAWN BY	TBB	10/23/15
MATERIAL	R.M.N.	N/A

Manufactured By: EVH Mfg. Co., LLC

HARDEE BY
EVH MFG. CO.
LORIS S.C.

DESCRIPTION: LR50148 COMPLETE
SHEET 1 of 10

DO NOT SCALE | B DWG SIZE | DWG. NO. 25925

LR50148 Complete

DWG. NO.	25925		REV.	A
REV	CHANGE	BY	DATE	ECN
IR	INITIAL RELEASE	TBB	10/23/15	1635
A	Stand Weldment Replaced (23160 was 23038)	TBB	1/19/16	1620

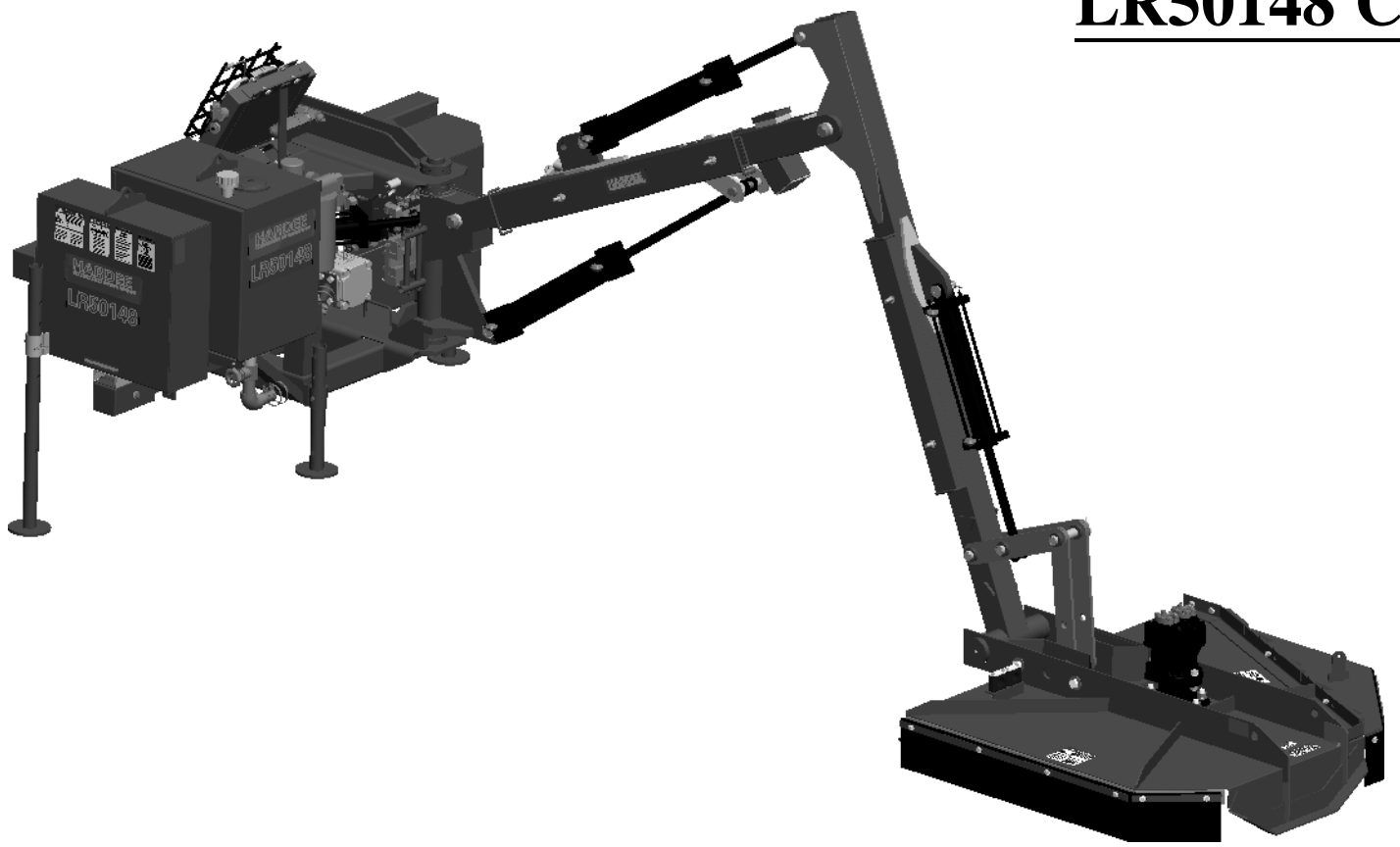

Top View

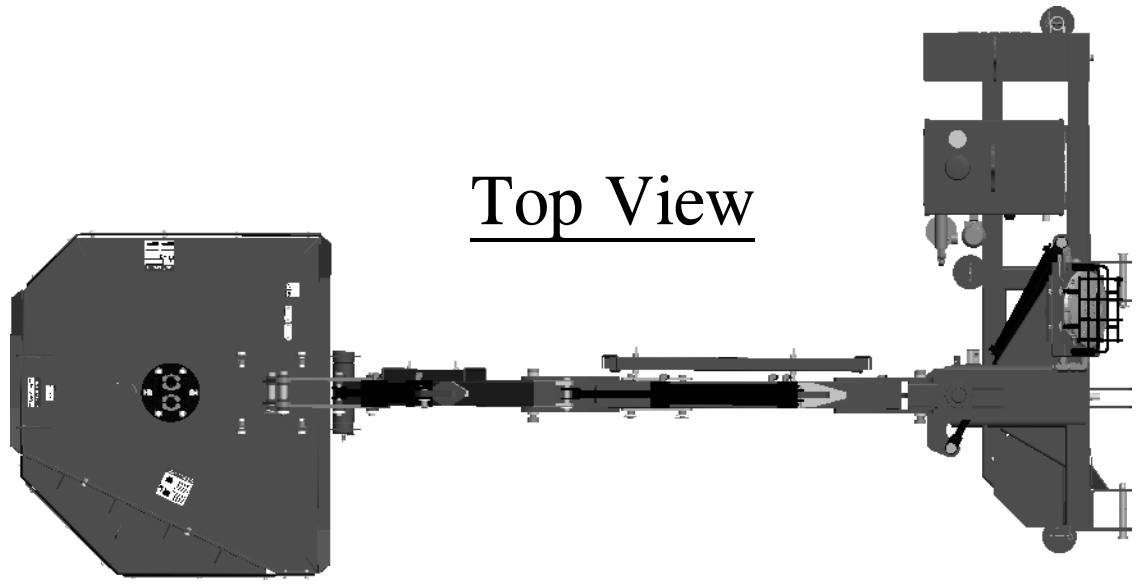

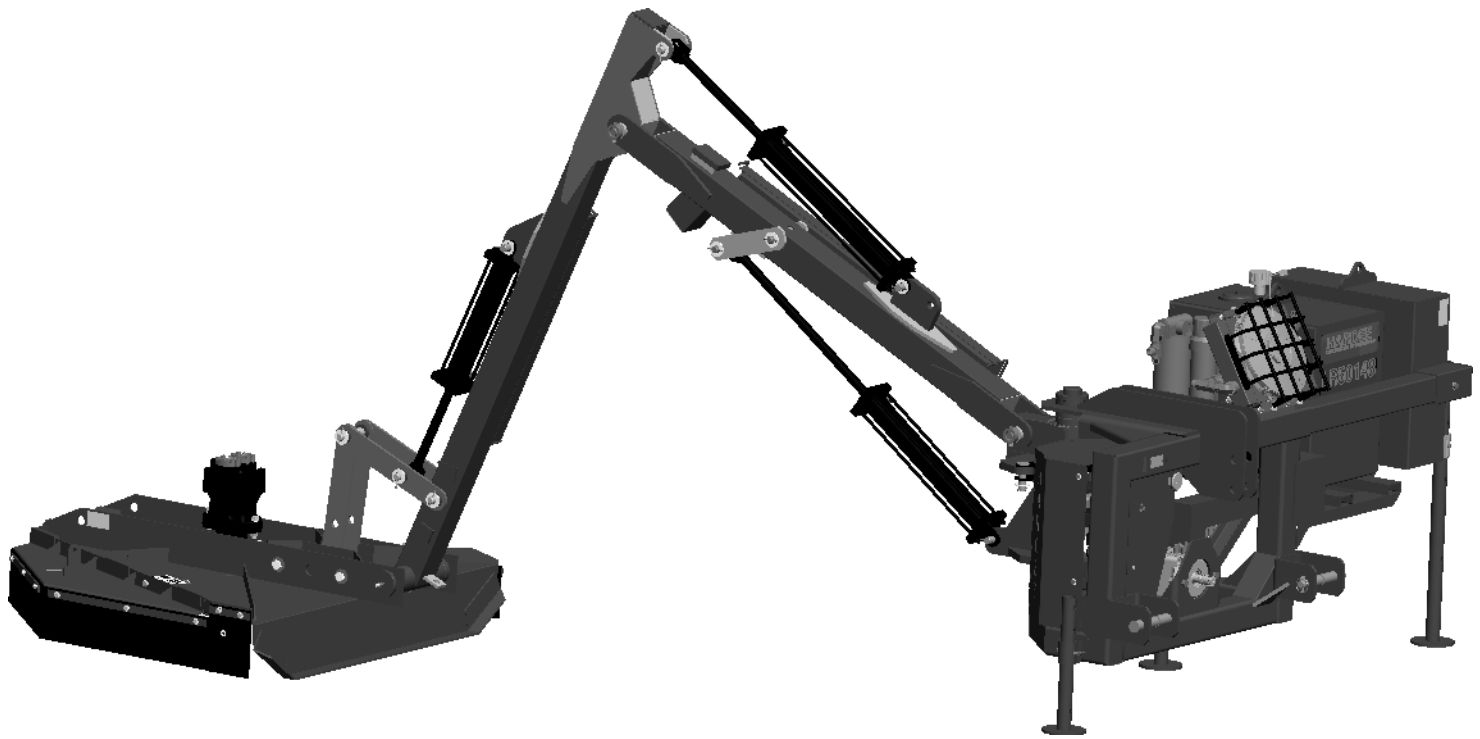

Bottom View

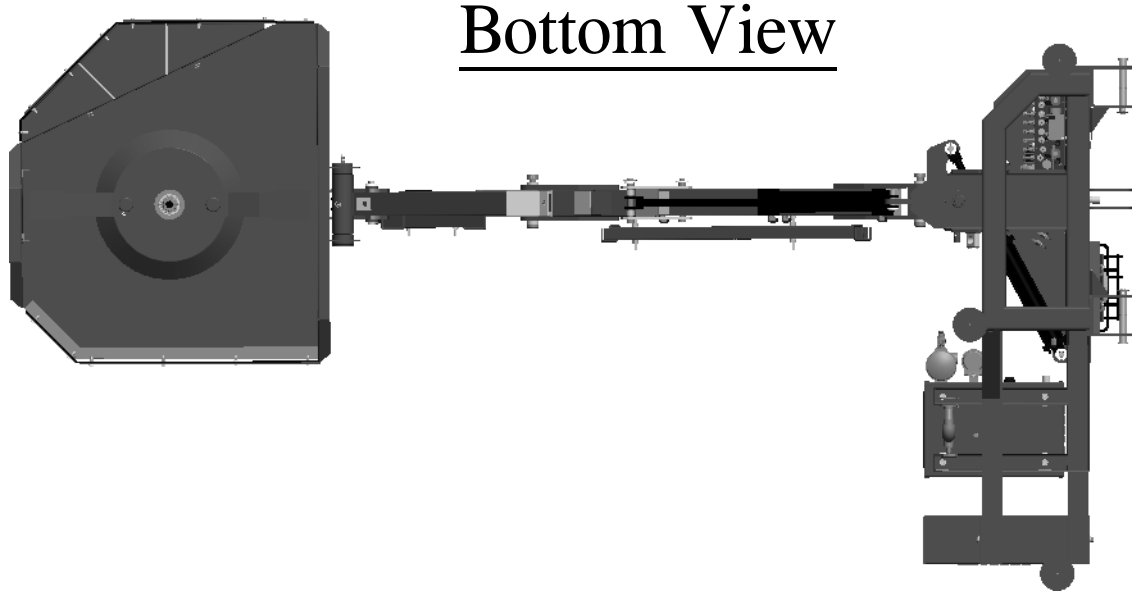

MODELED BY	TBB	10/23/15	HARDEE BY EVH MFG. CO. LORIS S.C.
DRAWN BY	TBB	10/23/15	
MATERIAL	R.M.N. N/A		DESCRIPTION: LR50148 COMPLETE
Manufactured By: EVH Mfg. Co., LLC			SHEET 2 of 10
DO NOT SCALE	B (DWG SIZE)	DWG. NO.	25925

All Dimensions in Inches Unless Otherwise Specified
Dimensions in [ ] are in Millimeters
Tolerance Unless Otherwise Specified
Fractional Dimensions ± 1/16" Decimal Dim. to Limits Shown
Angular Dimensions ± 1° All Holes to be +0 -1/32"

Hitch Frame & Components

DWG. NO.	25925		REV. A	
REV	CHANGE	BY	DATE	ECN
IR	INITIAL RELEASE	TBB	10/23/15	1635
A	Stand Weldment Replaced (23160 was 23038)	TBB	1/19/16	1620

Item	Part Number	Qty.	Description
1	10002	2	Hex Bolt, 1/4"-20 X 1" Gr.5 Plated
2	10006	2	Hex Bolt 1/4" x 3" gr.5 plated
3	10031	11	Hex Bolt 3/8 x 1 gr.5 plated
4	10032	1	Hex Bolt 3/8 x 1-1/2 gr.5 plated
5	10041	2	HEX BOLT (3/8" X 6" GR. 5 PLATED)
6	10072	2	Hex Bolt 1/2 x 1 1/2 gr.5 plated
7	10092	2	Hex Bolt 5/8 x 2 gr.5 plated
8	10135	2	HEX BOLT(M6x1x20MM GR.5 ZINC)
9	10153	2	Lock Nut, 1/4" Plated
10	10166	2	Lock Nut 5/8"-11 plated
11	10175	7	3/8"-16 Locknut (Gr.5 Plated)
12	10176	6	1/2" Locknut (Gr.5 Plated)
13	10200	6	1/4" Plated Flatwasher
14	10202	19	3/8" Flatwasher (Plated)
15	10204	8	1/2 Flatwasher (Plated)
16	10368	1	1-1/4" Gate Valve
17	10387	1	O-ring
18	10390	3	Clip Pin (1/8 x 2)
19	10393	3	Universal Clip Pin
20	10501	1	FLOW EZY BREATHER
21	10872	1	Pressure Flange SET
22	11005	1	Decal, Warning - Thrown Objects
23	11010	3	Large Hardee Logo Decal
24	11675	1	Return Filter Assembly
25	11775	1	Hydraulic 540RPM Pump
26	11850	1	Web Site Decal
27	13535	4	STAINLESS STEEL CLAMP, 1-1/2" TO 1-3/4"
28	13563	1	1-1/4"-M-NPT X 1-1/2" Metal Hose Barb
29	13632	1	1/4" NPT Metal Cap
30	13697	1	1-1/4" NPT Female Threaded Elbow
31	13758	1	20-M-NPT X 16-F-NPT Reducer
32	13778	1	1-1/4" X 3-1/2" Long NPT Nipple
33	13902	8	STRAIGHT, 6-M-JIC X 8-M-ORB
34	13974	1	16-M-JIC X 16-M-NPT 90 Deg. Elbow
35	15466	2	Tubing Insert, 3-1/2" Sqr. X 11
36	15845-15	1	DANGER DECAL (KIT 15845)
37	15845-16	1	DANGER DECAL (KIT 15845)
38	15845-9	1	WARNING DECAL (KIT 15845)
39	15852	1	Red Reflector Decal
40	15853	1	Yellow Reflector Decal
41	15854	1	Manual Holder
42	15860	2	U-Nut, 1/4"-20
43	16065	1	CONTROL VALVE & Joy Stick Kit
44	16070	8	3/8" - 90DEG. SWIVEL NUT
45	16077	3	Straight Fitting - 1"
46	16084	2	Swivel Nut Run Tee - 37 Deg. Flare
47	16086	1	Reducer 37 Deg. Flare (16-12 TRTXN-S)
48	16100	1	Sight Gauge 5", With Thermometer
49	16191	2	16-M-JIC X 16-M-NPT 90 Deg. Elbow
50	16249	1	PROX SENSOR
51	16353	2	16 M-JIC - 12 MORB Elbow
52	16354	1	Fitting, 16-M-ORB/16-F-JIC0
53	16404	1	CHECK VALVE- INLINE 5 PSI
54	16436	1	Clamp, 1/2" Plated Steel Loom
55	16496	1	CONTROLLER, MC 024 020 for 16065
56	16617	1	OIL COOLER
57	16618	1	TEMPERATURE SWITCH
58	16717	3	DECAL, MODEL LR50148
59	22833	1	Fluid Connector
60	23160	2	Stand Weldment, 17-7/8" Tall
61	23232	1	Support Brace
62	23325	1	WELDMENT, Weight Box
63	23335	1	Weldment, Oil Tank
64	23340	1	Stand Weldment
65	25725	1	WELDMENT, Hardee Logo
66	25857	1	WELDMENT-OIL COOLER SUPPORT
67	25930	1	ASSEMBLY Hitch Frame, LR50160 / LR50148
68	26855	1	WELDMENT - FAN GUARD FOR OIL COOLER

All Dimensions in Inches Unless Otherwise Specified
Dimensions in [ ] are in Millimeters
Tolerance Unless Otherwise Specified
Fractional Dimensions ± 1/16" Decimal Dim. to Limits Shown
Angular Dimensions ± 1° All Holes to be +0 -1/32"

MODELED BY	TBB	10/23/15	HARDEE BY EVH MFG. CO. LORIS S.C.
DRAWN BY	TBB	10/23/15	
MATERIAL	R.M.N. N/A		DESCRIPTION: LR50148 COMPLETE
Manufactured By: EVH Mfg. Co., LLC			SHEET 3 of 10
DO NOT SCALE	B DWG SIZE	DWG. NO.	25925

Hitch Frame & Components

DWG. NO.	25925		REV.	A
REV	CHANGE	BY	DATE	ECN
IR	INITIAL RELEASE	TBB	10/23/15	1635
A	Stand Weldment Replaced (23160 was 23038)	TBB	1/19/16	1620

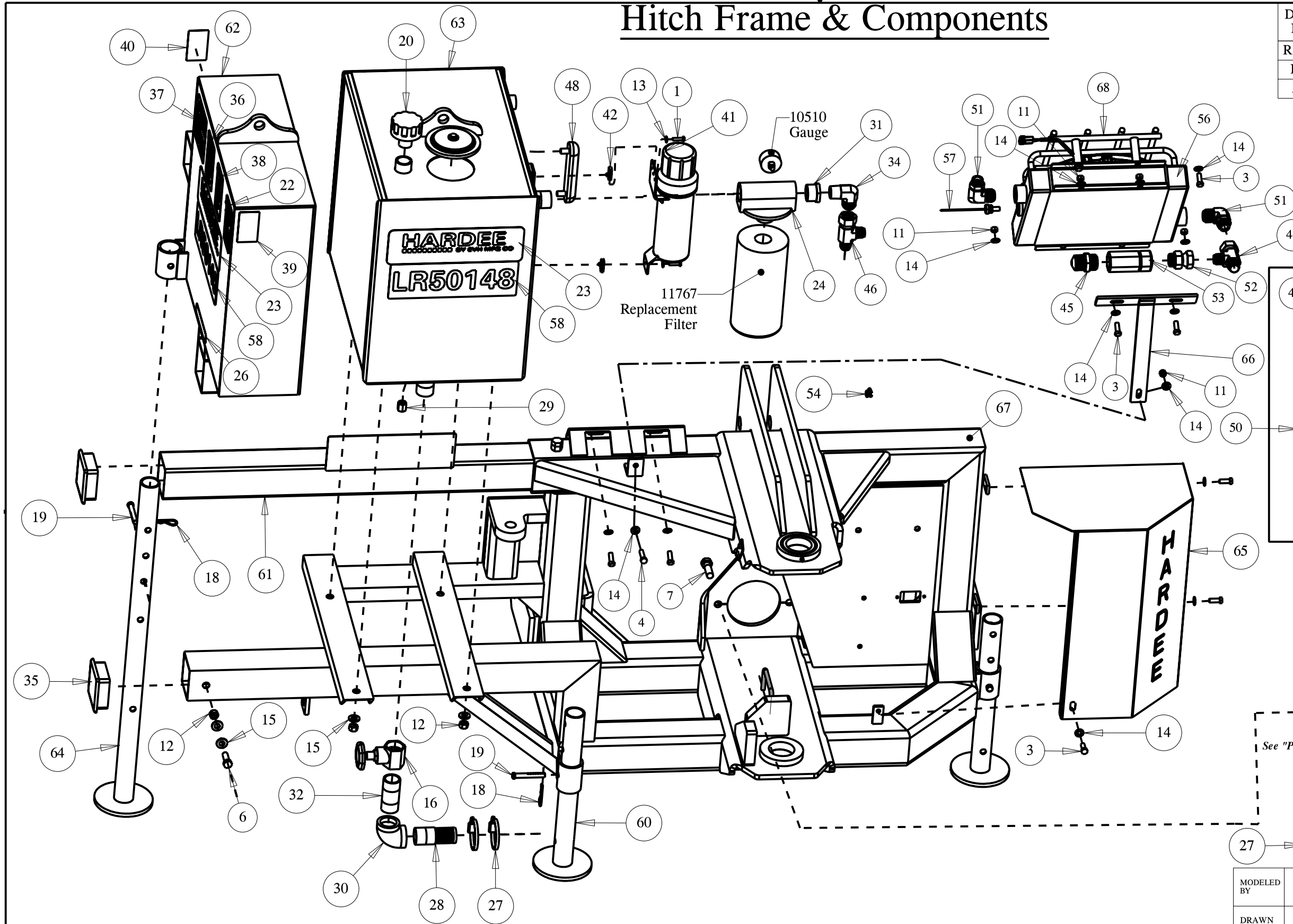

Valve Kit

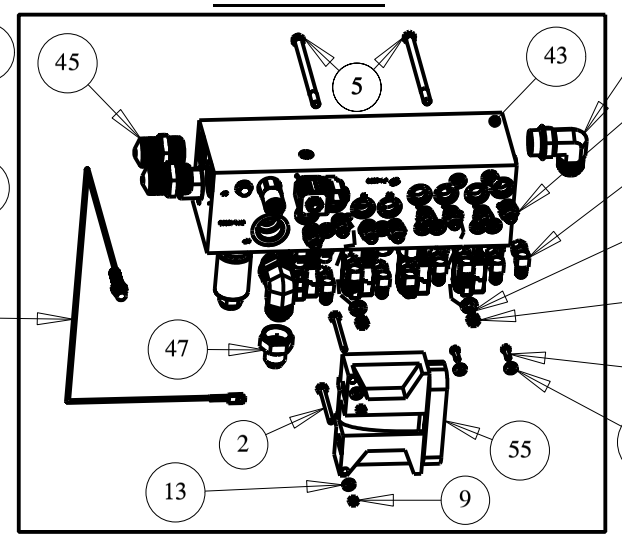

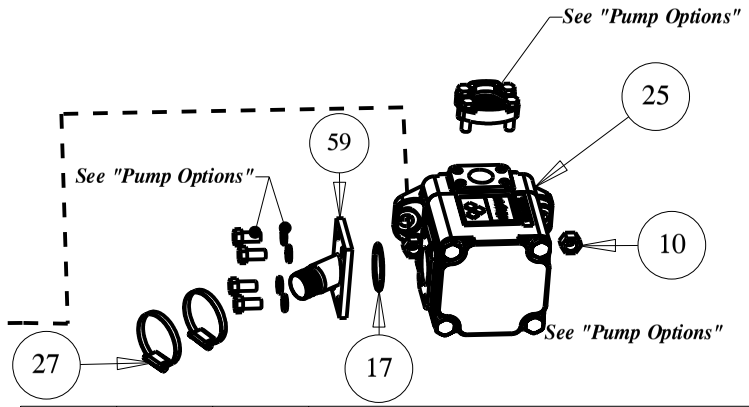

MODELED BY	TBB	10/23/15
DRAWN BY	TBB	10/23/15
MATERIAL	R.M.N.	N/A

HARDEE BY
EVH MFG. CO.
LORIS S.C.

DESCRIPTION: LR50148 COMPLETE

SHEET 4 of 10

Manufactured By:
EVH Mfg. Co., LLC

DO NOT SCALE | B (DWG SIZE) | DWG. NO. 25925

All Dimensions in Inches Unless Otherwise Specified
Dimensions in [ ] are in Millimeters
Tolerance Unless Otherwise Specified
Fractional Dimensions ± 1/16" Decimal Dim. to Limits Shown
Angular Dimensions ± 1° All Holes to be +0 -1/32"

Hitch Frame & Swivel

DWG. NO.	25925		REV.	A
REV	CHANGE	BY	DATE	ECN
IR	INITIAL RELEASE	TBB	10/23/15	1635
A	Stand Weldment Replaced (23160 was 23038)	TBB	1/19/16	1620

Item	Part Number	Qty.	Description
1	10207	2	Flatwasher, 1" plated
2	10252	2	Cotter Pin 3/16" X 2" Plated
3	10346	2	3 pt. Snap Pin (Lynch Pin)
4	10390	3	Clip Pin (1/8 x 2)
5	10393	3	Universal Clip Pin
6	10419	2	Hitch Pin, Cat. 2 & 3, Clevis Style
7	10448	1	CYLINDER, 3 X 17"
8	10538	2	Sleeve for 10419 Pin
9	13905	2	6-M-JIC X 8-M-NPT 90 Deg. Elbow
10	15251	1	1" Hose Clamp Body (SET OF 2)
11	15255	1	Hose Clamp Cover Plate
12	15256	2	Hex Bolt (1/4" X 2-3/8" Gr. 5 Plated)
13	15466	2	Tubing Insert, 3-1/2" Sqr. X 11
14	23160	2	Stand Weldment, 17-7/8" Tall
15	23232	1	Support Brace
16	23340	1	Stand Weldment
17	25724	2	WELDMENT, Cylinder Pin
18	25930	1	ASSEMBLY Hitch Frame, LR50160 / LR50148

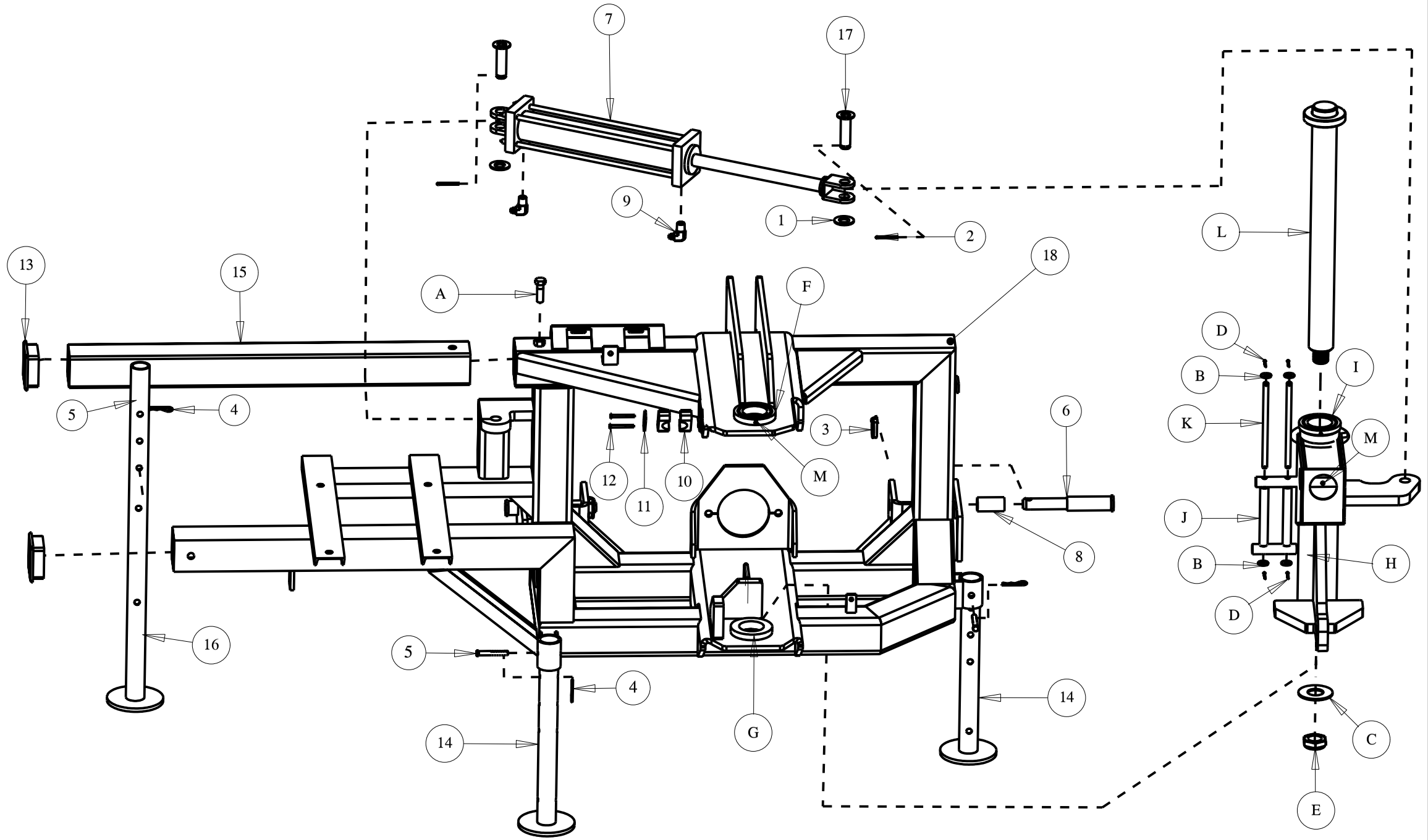

Item	Part Number	Qty.	Description
A	10092	1	HEX BOLT (5/8" X 2" GR. 5 PLATED)
B	10204	4	FLAT WASHER, 1/2" Plated, USS
C	10215	1	FLAT WASHER (1-1/2") USS Plain Zinc
D	10237	4	COTTER PIN (1/8" X 1-1/4" PLATED)
E	16294	1	LOCKNUT, 1-1/2"-12 Zinc Plated Nylon Insert Jam
F	23257	2	BUSHING W/ GREASE FITTING, 4-1/4" OD
G	23258	2	BUSHING, 4-1/4" OD X 7/8" LG.
H	23261	1	WELDMENT, Swivel, LR50160
I	23268	2	BUSHING W/GREASE FITTING, 4-1/4" OD
J	23272	2	HOSE BRACKET ROLLER
K	23273	2	Hose Bracket Rod
L	23284	1	WELDMENT, Swing arm shaft, LR50160/LR40160
M	10322	5	GREASE FITTING, 1/4"-28 Thd

All Dimensions in Inches Unless Otherwise Specified
Dimensions in [ ] are in Millimeters
Tolerance Unless Otherwise Specified
Fractional Dimensions ± 1/16" Decimal Dim. to Limits Shown
Angular Dimensions ± 1° All Holes to be +0 -1/32"

MODELED BY	TBB	10/23/15
DRAWN BY	TBB	10/23/15
MATERIAL	R.M.N.	N/A

Manufactured By:
EVH Mfg. Co., LLC

HARDEE BY
EVH MFG. CO.
LORIS S.C.

DESCRIPTION: LR50148 COMPLETE
SHEET 5 of 10

DO NOT SCALE | B DWG SIZE | DWG. NO. 25925

1st Stage Boom

DWG. NO.	25925		REV.	A
REV	CHANGE	BY	DATE	ECN
IR	INITIAL RELEASE	TBB	10/23/15	1635
A	Stand Weldment Replaced (23160 was 23038)	TBB	1/19/16	1620

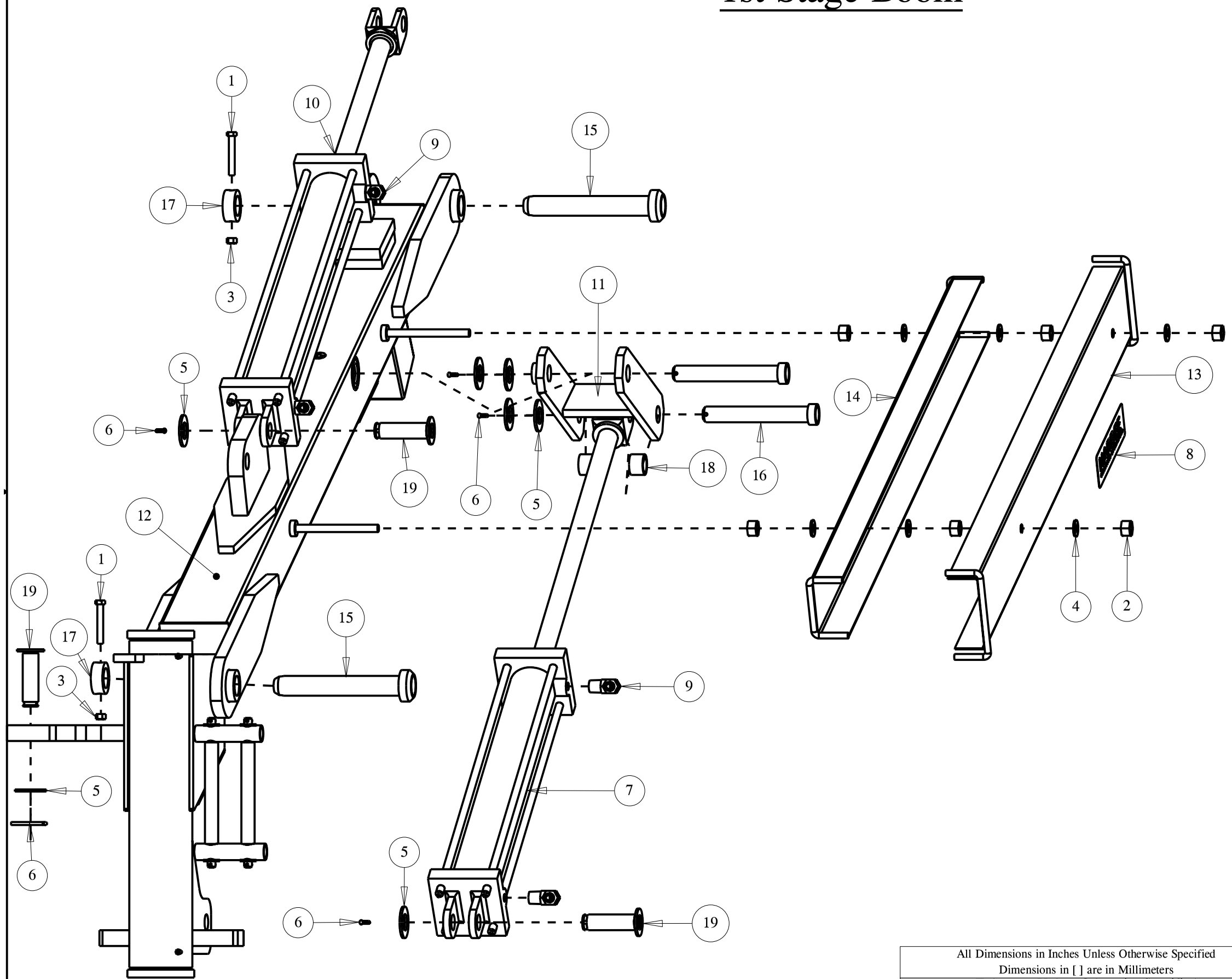

Item	Part Number	Qty.	Description
1	10034	2	Hex Bolt 3/8" x 2-1/2" gr.5 plated
2	10166	6	Lock Nut 5/8"-11 plated
3	10175	2	3/8"-16 Locknut (Gr.5 Plated)
4	10204	6	1/2 Flatwasher (Plated)
5	10207	7	Flatwasher, 1" plated
6	10252	5	Cotter Pin 3/16" X 2" Plated
7	10454	1	CYLINDER, 4 X 24"
8	11032	1	Small Hardee Logo Decal
9	13905	4	6-M-JIC X 8-M-NPT 90 Deg. Elbow
10	15928	1	Cylinder, 4" X 24" W/ 2" Rod & 1" Pins
11	23280	1	WELDMENT, Cylinder Breakaway
12	23294	1	1st Stage Boom
13	23349	1	Outer Hose Guard Weldment
14	23352	1	Inner Hose Guard Weldment
15	23379	2	1-1/4" X 9" Pin Weldment for LR's
16	23434	2	Pin Weldment
17	23457	2	COLLAR, for 23379 PIN (Bushing)
18	25117	2	Spacer
19	25724	3	WELDMENT, Cylinder Pin

All Dimensions in Inches Unless Otherwise Specified
Dimensions in [ ] are in Millimeters
Tolerance Unless Otherwise Specified
Fractional Dimensions ± 1/16" Decimal Dim. to Limits Shown
Angular Dimensions ± 1° All Holes to be +0 -1/32"

MODELED BY	TBB	10/23/15	HARDEE BY EVH MFG. CO. LORIS S.C.
DRAWN BY	TBB	10/23/15	
MATERIAL	R.M.N. N/A		DESCRIPTION: LR50148 COMPLETE
Manufactured By: EVH Mfg. Co., LLC			SHEET 6 of 10
DO NOT SCALE	B (DWG SIZE)	DWG. NO.	25925

2nd Stage Boom

DWG. NO.	25925		REV.	A
REV	CHANGE	BY	DATE	ECN
IR	INITIAL RELEASE	TBB	10/23/15	1635
A	Stand Weldment Replaced (23160 was 23038)	TBB	1/19/16	1620

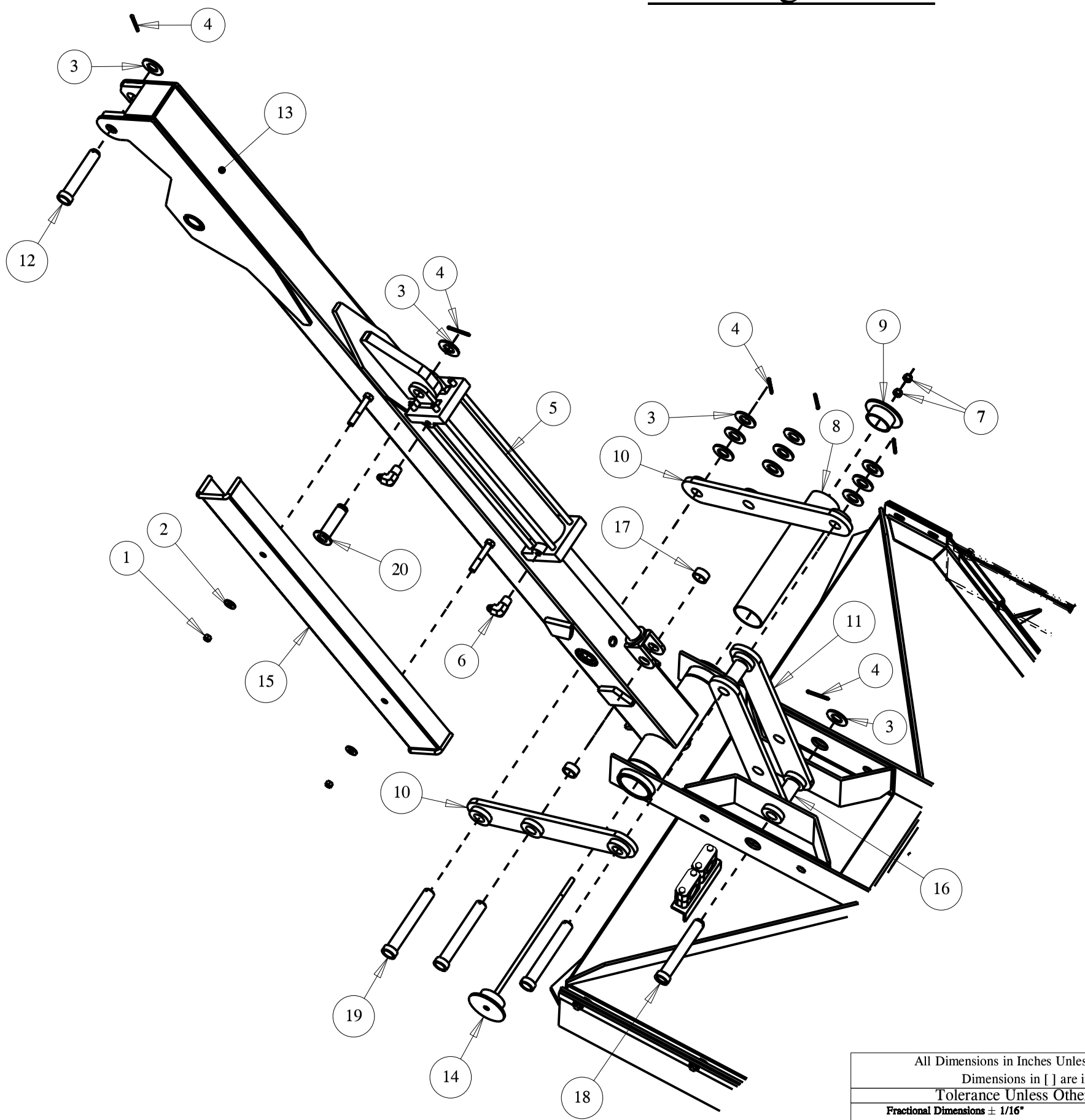

Item	Part Number	Qty.	Description
1	10175	2	3/8"-16 Locknut (Gr.5 Plated)
2	10204	2	1/2 Flatwasher (Plated)
3	10207	12	Flatwasher, 1" plated
4	10252	6	Cotter Pin 3/16" X 2" Plated
5	10448	1	CYLINDER, 3 X 17"
6	13905	2	6-M-JIC X 8-M-NPT 90 Deg. Elbow
7	16138	2	Lock Nut 7/16"-14 NC with Nylon Insert
8	23130	1	Pivot Sleeve
9	23131	1	End Cap Weldment
10	23287	2	Boom To Deck Bracket Weldment
11	23290	2	WELDMENT, Boom to Deck Bracket, 21"
12	23292	1	PIN WELDMENT (1" x 5" LG)
13	23310	1	2nd Stage Boom
14	23345	1	Head Mounting Bracket Weldment
15	23355	1	WELDMENT, GUARD
16	23361	2	Spacer, 1" X 2-1/8"
17	23363	2	SPACER (1" SCH 40 Pipe x 5/8")
18	23380	1	WELDMENT, 1" x 6 1/4" PIN
19	23434	3	Pin Weldment
20	25724	1	WELDMENT, Cylinder Pin

All Dimensions in Inches Unless Otherwise Specified
Dimensions in [ ] are in Millimeters
Tolerance Unless Otherwise Specified
Fractional Dimensions ± 1/16" **Angular Dimensions ± 1°**
Decimal Dim. to Limits Shown All Holes to be +0 -1/32"

MODELED BY	TBB	10/23/15
DRAWN BY	TBB	10/23/15
MATERIAL	R.M.N. N/A	
Manufactured By: EVH Mfg. Co., LLC		

HARDEE BY
EVH MFG. CO.
LORIS S.C.

DESCRIPTION	SHEET 7 of 10
LR50148 COMPLETE	
DO NOT SCALE	B DWG SIZE
DWG. NO.	25925

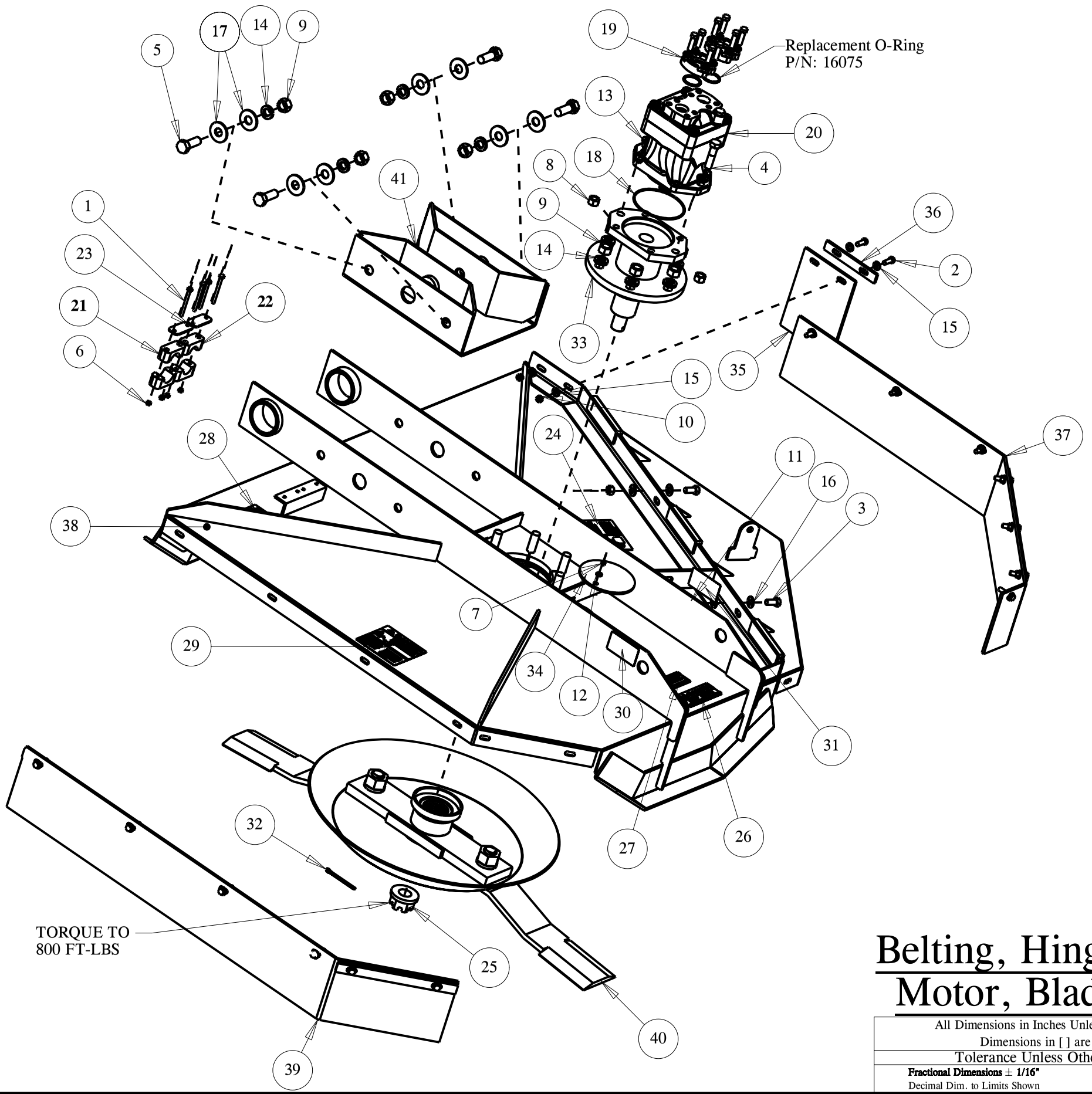

DWG. NO.	25925		REV.	A
REV	CHANGE	BY	DATE	ECN
IR	INITIAL RELEASE	TBB	10/23/15	1635
A	Stand Weldment Replaced (23160 was 23038)	TBB	1/19/16	1620

Item	Part Number	Qty.	Description
1	10006	4	Hex Bolt 1/4" x 3" gr.5 plated
2	10031	2	Hex Bolt 3/8 x 1 gr.5 plated
3	10071	2	Hex Bolt 1/2 x 1 gr.5 plated
4	10093	2	Hex Bolt 5/8" x 2-1/2" gr.5 plated
5	10111	4	Hex Bolt 3/4"-10 X 2" gr.5 Plated
6	10153	4	Lock Nut, 1/4" Plated
7	10154	1	Lock Nut 5/16"-18 Plated
8	10166	2	Lock Nut 5/8"-11 plated
9	10168	10	3/4"-10 Locknut (Gr.5 Plated)
10	10175	2	3/8"-16 Locknut (Gr.5 Plated)
11	10176	2	1/2" Locknut (Gr.5 Plated)
12	10181	1	Lockwasher 5/16" plated
13	10185	2	Lockwasher 5/8" Plated
14	10186	10	Lockwasher 3/4" Plated
15	10202	4	3/8" Flatwasher (Plated)
16	10204	4	1/2 Flatwasher (Plated)
17	10206	8	Flatwasher 3/4 plated
18	10388	1	O-Ring
19	10872	2	Pressure Flange SET
20	15241	1	Hydraulic Vane Motor
21	15251	1	1" Hose Clamp Body (SET OF 2)
22	15252	1	3/4" Hose Clamp Body (SET OF 2)
23	15255	2	Hose Clamp Cover Plate
24	15338	1	Danger Decal, Exposed Blades
25	15481	1	Slotted Hex Nut 1-1/4" -18UNEF
26	15845-1	1	DANGER DECAL (KIT 15845)
27	15845-10	1	WARNING DECAL (KIT 15845)
28	15845-11	1	WARNING DECAL (KIT 15845)
29	15845-16	1	DANGER DECAL (KIT 15845)
30	15852	1	Red Reflector Decal
31	15853	1	Yellow Reflector Decal
32	15968	1	Cotter Pin 1/4" x 3"
33	16579	1	Hydraulic Motor Housing Assembly
34	20031	1	Access Cover
35	22691	1	LR40148 / LR50148 Front Corner Belting
36	22751	1	Short Belting Flat
37	22770	1	LR40148 / LR50148 Belting Extension Kit
38	22789	1	LR40148 / LR50148 Deck Weldment (6 Bolt)
39	22799	1	LR40148 / LR50148 Rubber Belting Kit
40	22803	1	Blade Holder w/Blades
41	23320	1	Cylinder Mount Weldment

Belting, Hinge Gate & Motor, Blade Holder

All Dimensions in Inches Unless Otherwise Specified
Dimensions in [ ] are in Millimeters
Tolerance Unless Otherwise Specified
Fractional Dimensions ± 1/16" Decimal Dim. to Limits Shown
Angular Dimensions ± 1° All Holes to be +0 -1/32"

MODELED BY	TBB	10/23/15
DRAWN BY	TBB	10/23/15
MATERIAL	R.M.N. N/A	
Manufactured By: EVH Mfg. Co., LLC		

HARDEE BY
EVH MFG. CO.
LORIS S.C.

DESCRIPTION: LR50148 COMPLETE
SHEET 8 of 10

DO NOT SCALE | B DWG SIZE | DWG. NO. 25925

Hydraulic Schematic For LR50148

DWG. NO.	25925		REV.	A
REV	CHANGE	BY	DATE	ECN
IR	INITIAL RELEASE	TBB	10/23/15	1635
A	Stand Weldment Replaced (23160 was 23038)	TBB	1/19/16	1620

Item	Part Number	Qty.	Description
1	10031	8	Hex Bolt 3/8 x 1 gr.5 plated
2	10071	4	Hex Bolt 1/2 x 1 gr.5 plated
3	10092	4	Hex Bolt 5/8 x 2 gr.5 plated
4	10166	4	Lock Nut 5/8"-11 plated
5	10175	4	3/8"-16 Locknut (Gr.5 Plated)
6	10184	4	Lockwasher 1/2 plated
7	10185	8	Lockwasher 5/8" Plated
8	10202	12	3/8" Flatwasher (Plated)
9	10336	1	Gear Oil [85W-140] - (Not Shown)
10	10368	1	1-1/4" Gate Valve
11	10373	1	Hydraulic Oil
12	10387	2	O-ring
13	10448	2	CYLINDER, 3 X 17"
14	10454	1	CYLINDER, 4 X 24"
15	10501	1	FLOW EZY BREATHER
16	10582	1	PRESSURE HOSE 3/8" X 55" W/6-F-JIC
17	10583	1	3/8" SAE 100 R1 X 125" W/6-F-JIC
18	10584	1	PRESSURE HOSE 3/8" X 210" W/6-F-JIC
19	10585	2	PRESSURE HOSE 3/8" X 83" W/6-F-JIC
20	10587	1	PRESSURE HOSE 3/4" X 106" W/12-M-JIC
21	10646	1	Grease
22	10866	1	1" X 106" Pressure Hose
23	10872	2	Pressure Flange SET
24	11675	1	Return Filter Assembly
25	11775	1	Hydraulic 540RPM Pump
26	13535	4	STAINLESS STEEL CLAMP, 1-1/2" TO 1-3/4"
27	13563	1	1-1/4"-M-NPT X 1-1/2" Metal Hose Barb
28	13697	1	1-1/4" NPT Female Threaded Elbow
29	13758	1	20-M-NPT X 16-F-NPT Reducer
30	13778	1	1-1/4" X 3-1/2" Long NPT Nipple
31	13902	8	STRAIGHT, 6-M-JIC X 8-M-ORB
32	13905	8	6-M-JIC X 8-M-NPT 90 Deg. Elbow
33	13974	1	16-M-JIC X 16-M-NPT 90 Deg. Elbow
34	15241	1	Hydraulic Vane Motor
35	15326	1	Pressure Hose 3/8" X 17" Lg. W/ 6-F-JIC Both Ends
36	15339	1	PRESSURE HOSE 3/8" X 32" W/6-F-JIC
37	15453	4	Hex Bolt (M14-2.0 X 25 Gr. 8.8 Plated)
38	15845-1	1	DANGER DECAL (KIT 15845)
39	15845-10	1	WARNING DECAL (KIT 15845)
40	15845-11	1	WARNING DECAL (KIT 15845)
41	15845-15	1	DANGER DECAL (KIT 15845)
42	15845-16	1	DANGER DECAL (KIT 15845)
43	15845-9	1	WARNING DECAL (KIT 15845)
44	15910	46	HOSE SLEEVE
45	15928	1	Cylinder, 4" X 24" W/ 2" Rod & 1" Pins
46	16065	1	CONTROL VALVE & Joy Stick Kit
47	16067	1	PUMP - VALVE HOSE
48	16068	1	HOSE ASSY. VALVE TO TANK
49	16070	8	3/8" - 90DEG. SWIVEL NUT
50	16071	1	PRESSURE HOSE 3/8" X 192" W/6-F-JIC
51	16077	3	Straight Fitting - 1"
52	16084	2	Swivel Nut Run Tee - 37 Deg. Flare
53	16086	1	Reducer 37 Deg. Flare (16-12 TRTXN-S)
54	16191	2	16-M-JIC X 16-M-NPT 90 Deg. Elbow
55	16278	1	Joystick Assembly (Not Shown)
56	16353	2	16 M-JIC - 12 MORB Elbow
57	16354	1	Fitting, 16-M-ORB/16-F-JIC0
58	16379	1	HYDRAULIC HOSE, 1" - OIL
59	16390	1	HYD. HOSE, 1" 5 PSI RELIEF - OIL FILTER
60	16392	1	PRESSURE HOSE 3/4" X 143" LG
61	16393	1	PRESSURE HOSE 1" X 153" LG
62	16404	1	CHECK VALVE- INLINE 5 PSI
63	16431	1	WIRING HARNESS, Oil Cooler
64	16519	4	HEX BOLT, 12MM X 1.75 X 35
65	16617	1	OIL COOLER
66	16618	1	TEMPERATURE SWITCH
67	16717	1	DECAL, MODEL LR50148
68	22833	2	Fluid Connector
69	23335	1	Weldment, Oil Tank
70	23340	1	Stand Weldment
71	25725	1	WELDMENT, Hardee Logo
72	25798	1	Hose, Suction (1-1/2" x 36")

Pump Options

540 RPM - P/N: 11775

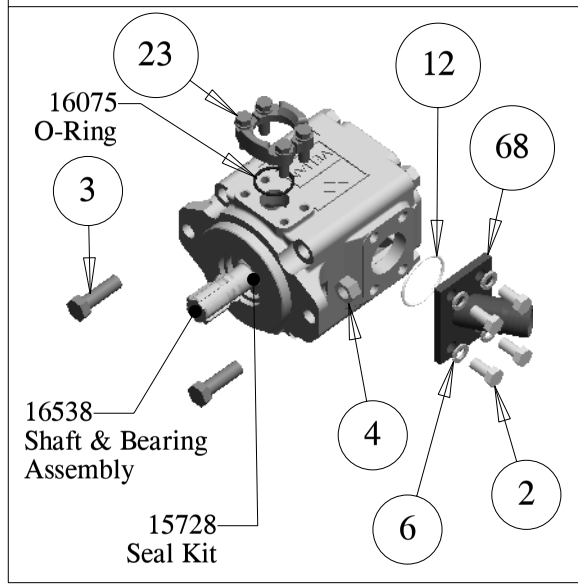

1000 RPM - P/N: 15240

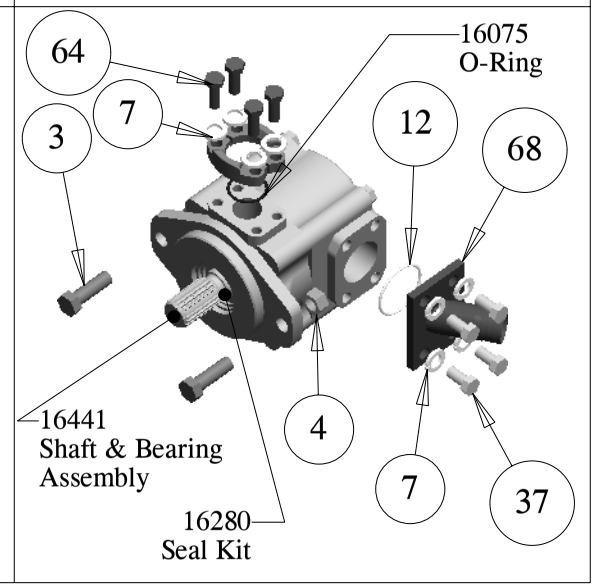

All Dimensions in Inches Unless Otherwise Specified
Dimensions in [ ] are in Millimeters
Tolerance Unless Otherwise Specified
Fractional Dimensions ± 1/16" Decimal Dim. to Limits Shown
Angular Dimensions ± 1° All Holes to be +0 -1/32"

MODELED BY	TBB	10/23/15	HARDEE BY EVH MFG. CO. LORIS S.C.
DRAWN BY	TBB	10/23/15	
MATERIAL	R.M.N. N/A		DESCRIPTION: LR50148 COMPLETE
Manufactured By: EVH Mfg. Co., LLC			SHEET 9 of 10
DO NOT SCALE	B (DWG SIZE)	DWG. NO.	25925

Hydraulic Schematic For LR50148

DWG. NO.	25925		REV.	A
REV	CHANGE	BY	DATE	ECN
IR	INITIAL RELEASE	TBB	10/23/15	1635
A	Stand Weldment Replaced (23160 was 23038)	TBB	1/19/16	1620

Blade Hydraulics

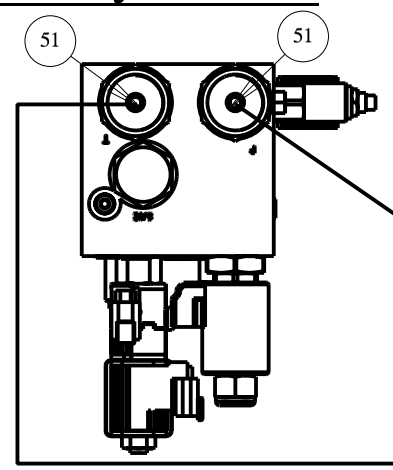

16067 Hose

16068 Hose

Oil Cooler

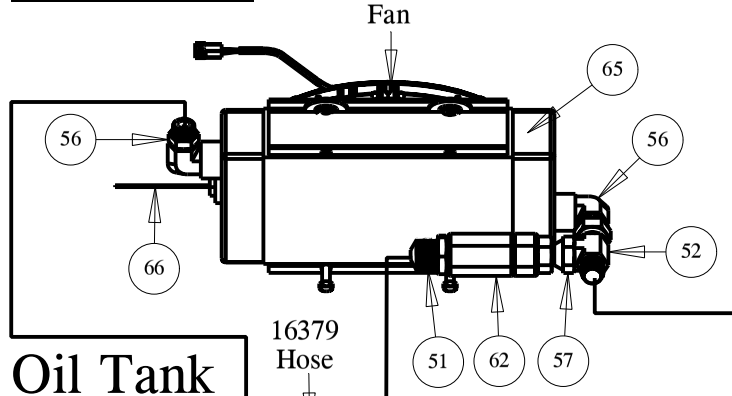

16390 Hose

16379 Hose

Oil Tank

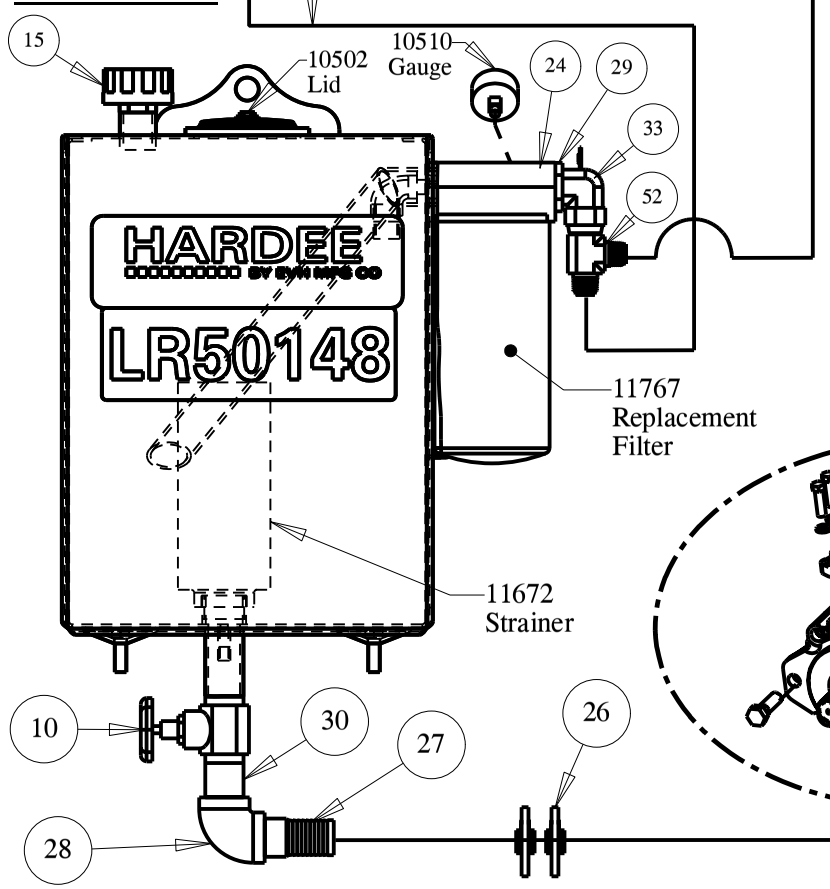

Cylinder Hydraulics

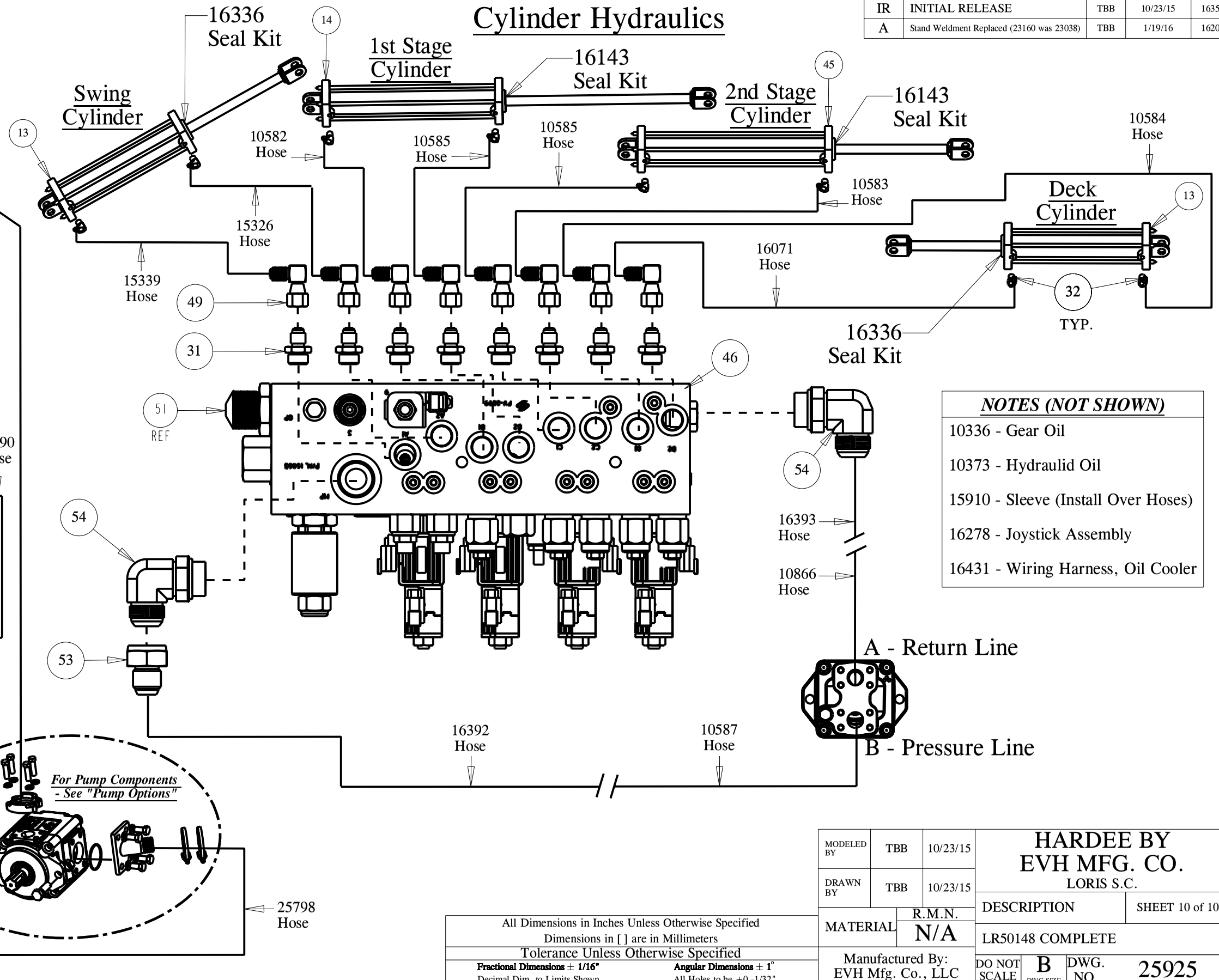

NOTES (NOT SHOWN)

10336 - Gear Oil

10373 - Hydraulid Oil

15910 - Sleeve (Install Over Hoses)

16278 - Joystick Assembly

16431 - Wiring Harness, Oil Cooler

All Dimensions in Inches Unless Otherwise Specified
Dimensions in [ ] are in Millimeters
Tolerance Unless Otherwise Specified
Fractional Dimensions ± 1/16" Decimal Dim. to Limits Shown
Angular Dimensions ± 1° All Holes to be +0 -1/32"

MODELED BY	TBB	10/23/15
DRAWN BY	TBB	10/23/15
MATERIAL	R.M.N.	N/A

Manufactured By: EVH Mfg. Co., LLC

HARDEE BY EVH MFG. CO.
LORIS S.C.

DESCRIPTION	SHEET 10 of 10
LR50148 COMPLETE	
DO NOT SCALE	B DWG SIZE
DWG. NO.	25925

Hydraulic Motor Housing
EVH P/N 16579

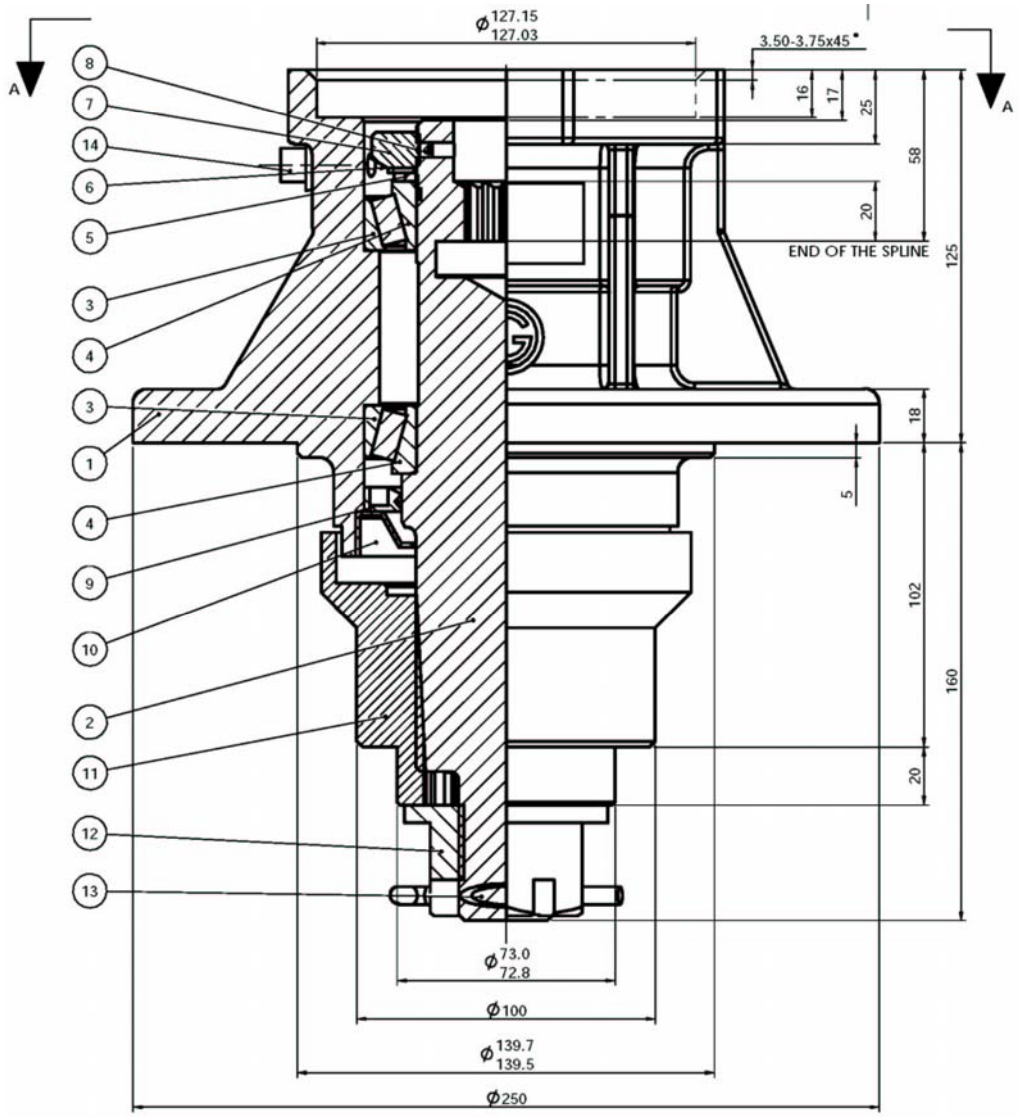

Key #	Part No.	Description	Key #	Part No.	Description
1	N/A	Housing	8	16480	Set Screw
2	N/A	Shaft	9	16491	Lip Seal-Output
3	15952	Cup	10	16488	Seal Protector
4	15953	Bearing	11	16580	Blade Hub
5	16492	Washer w/tang	12	15481	Nut, Hex Slotted
6	15965	Lockwasher	13	15968	Cotter Pin
7	15966	Locknut	14	15784	Plug, Pipe

ITEM NO.	PART NUMBER	QTY REQD.	NOMENCLATURE OR DESCRIPTION
1	10311	2	BLADE BOLT NUT GR.8
2	10312	2	BLADE BOLT LOCKWASHER GR.8
3	10313	2	BLADE BOLT GR.8
4	10427	2	NON–DIRECTIONAL BLADE
5	22804	1	BLADE HOLDER WELDMENT

DWG. NO. 22803			REV. IR
REV	CHANGE	BY	DATE / ECN
IR	INITIAL RELEASE	C.K.N.	9/2/10 / 1372

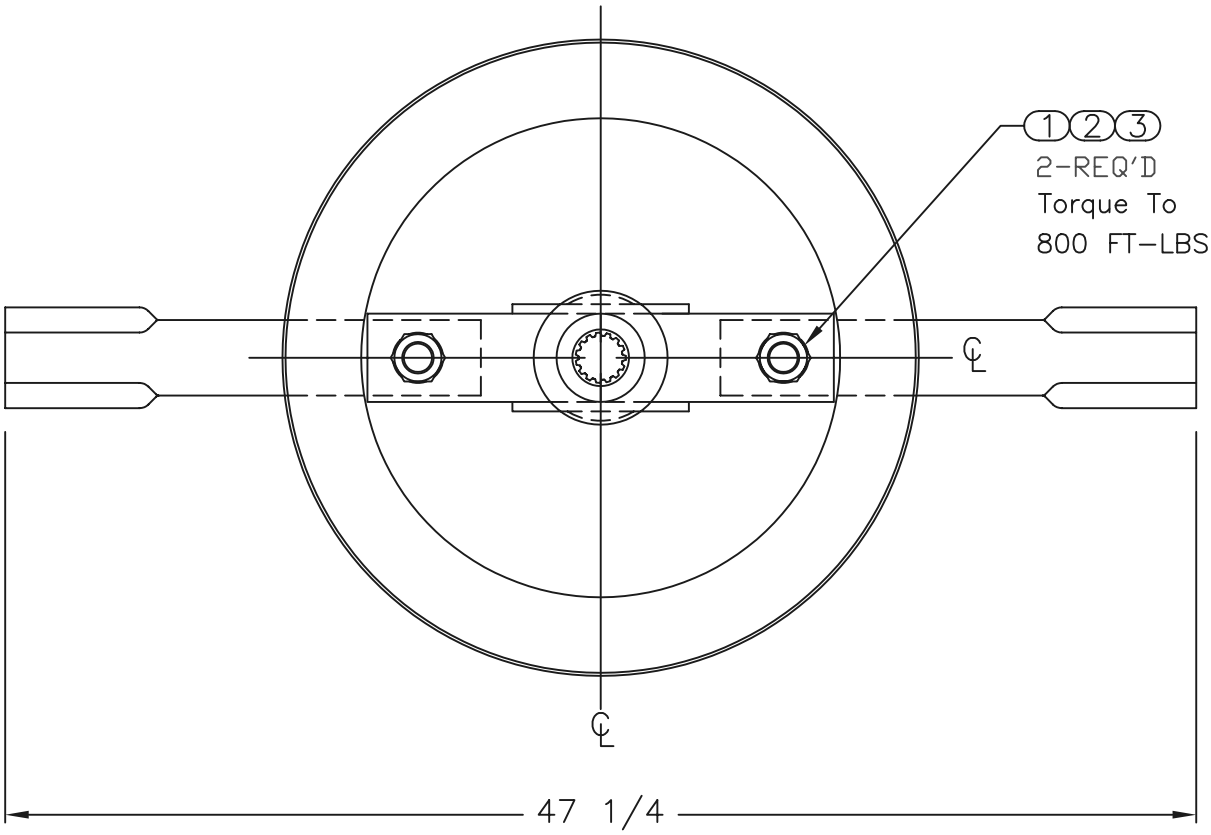

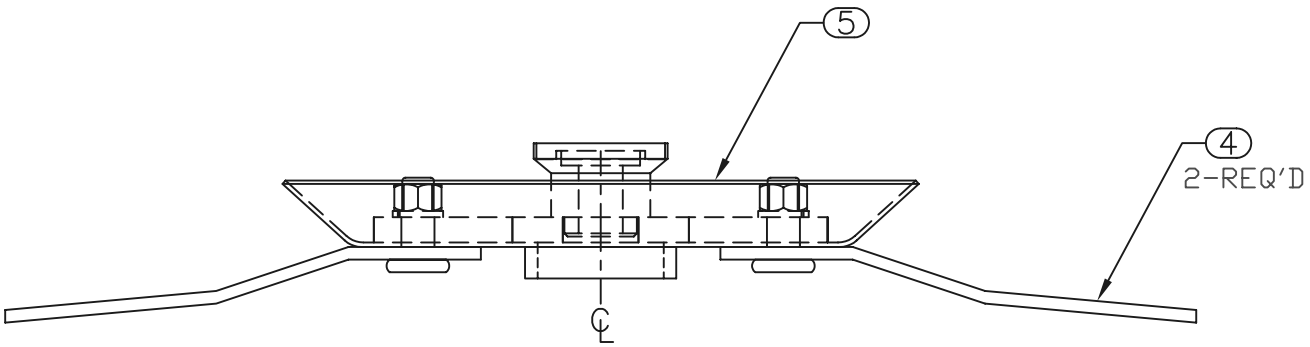

All Dimensions in Inches Unless Otherwise Specified
Dimensions in [ ] are in Millimeters

Tolerances Unless Otherwise Specified
Fractional Dimensions ±1/16" Angular Dimensions ±1°
Decimal Dim. to Limits Shown All holes to be $^{+0}_{-1/32}$

DRAWN BY	C.K.N.	9/2/10
CHECKED BY		
MATERIAL	R.M.N.	

MANUFACTURED BY: HARDEE BY EVH MFG.

HARDEE BY EVH MFG. CO.
LORIS S.C.

APPLICATION	OLD PART #
LR40148	----

DESCRIPTION BLADE HOLDER W/BLADES COMPLETE W/ANTI WRAP HUB

DO NOT SCALE | A DWG SIZE | DWG. NO. 22803

Item	Part Number	Qty.	Description
1	10032	6	Hex Bolt 3/8 x 1-1/2 gr.5 plated
2	10175	6	3/8" Locknut (Gr.5 Plated)
3	10202	12	3/8" Flatwasher (Plated)
4	22692	1	Belting for LR40148 Extension
5	22778	1	Short Rubber Belting Flat
6	22779	1	Belting Extension Flat

DWG. NO.	22799		REV. IR
REV	CHANGE	BY	DATE	ECN
IR	INITIAL RELEASE	B.C	8/22/07	– – –

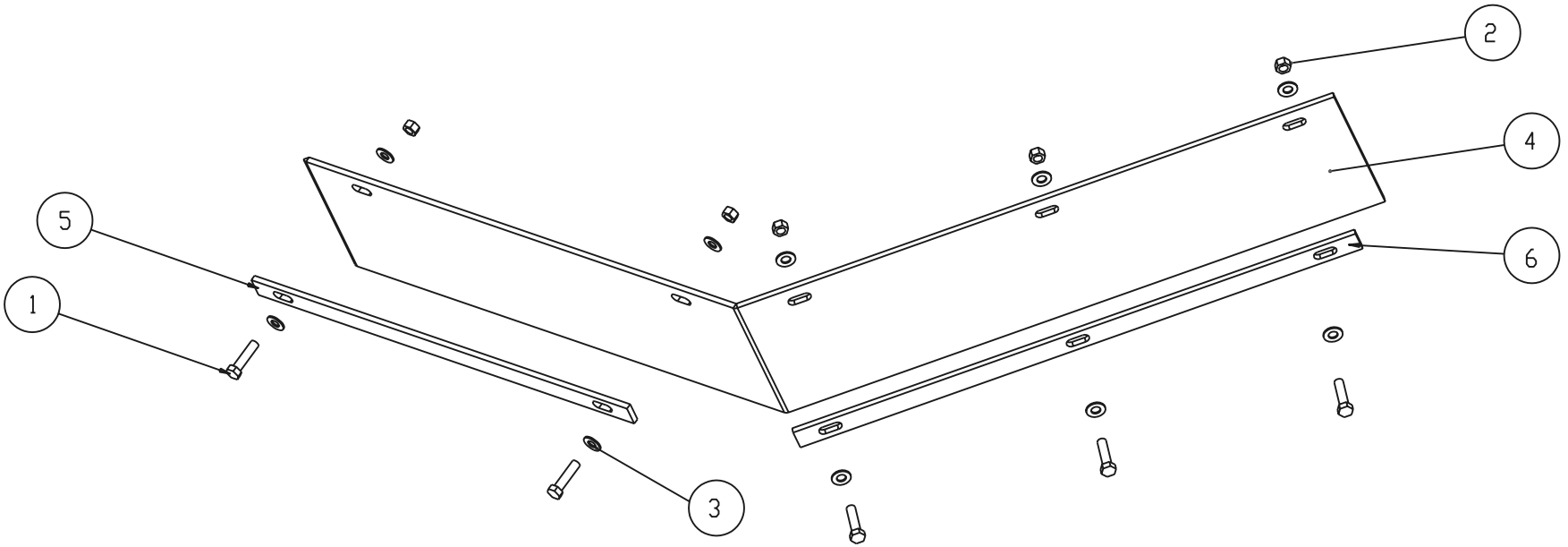

All Dimensions in Inches Unless Otherwise Specified
Dimensions in [ ] are in Millimeters
Tolerance Unless Otherwise Specified
Fractional Dimensions ± 1/16"
Angular Dimensions ± 1°
Decimal Dim. to Limits Shown
All Holes to be +0 -1/32"

MODELED BY	B.C	8/22/07
DRAWN BY	B.C	8/22/07
MATERIAL	R.M.N. N/A	

Manufactured by:
EVH MFG CO, LLC

HARDEE
EVH MFG CO.
LORIS S.C.

DESCRIPTION | SHEET 1 of 1

LR40148 / LR50148 Rear Belting Kit

DO NOT SCALE | A DWG SIZE | DWG. NO. 22799

Item	Part Number	Qty.	Description
1	10032	7	Hex Bolt 3/8 x 1-1/2 gr.5 plated
2	10175	7	3/8" Locknut (Gr.5 Plated)
3	10202	14	3/8" Flatwasher (Plated)
4	22731	1	Short Rubber Belting Flat
5	22775	1	Belting for LR40160 Extension
6	22776	1	Belting Extension Flat

DWG. NO.	22770		REV.	A
REV	CHANGE	BY	DATE	ECN
IR	INITIAL RELEASE	R.T.N.	9/3/04	– – –
A	VARIOUS CHANGES	B.C	1/4/07	1110

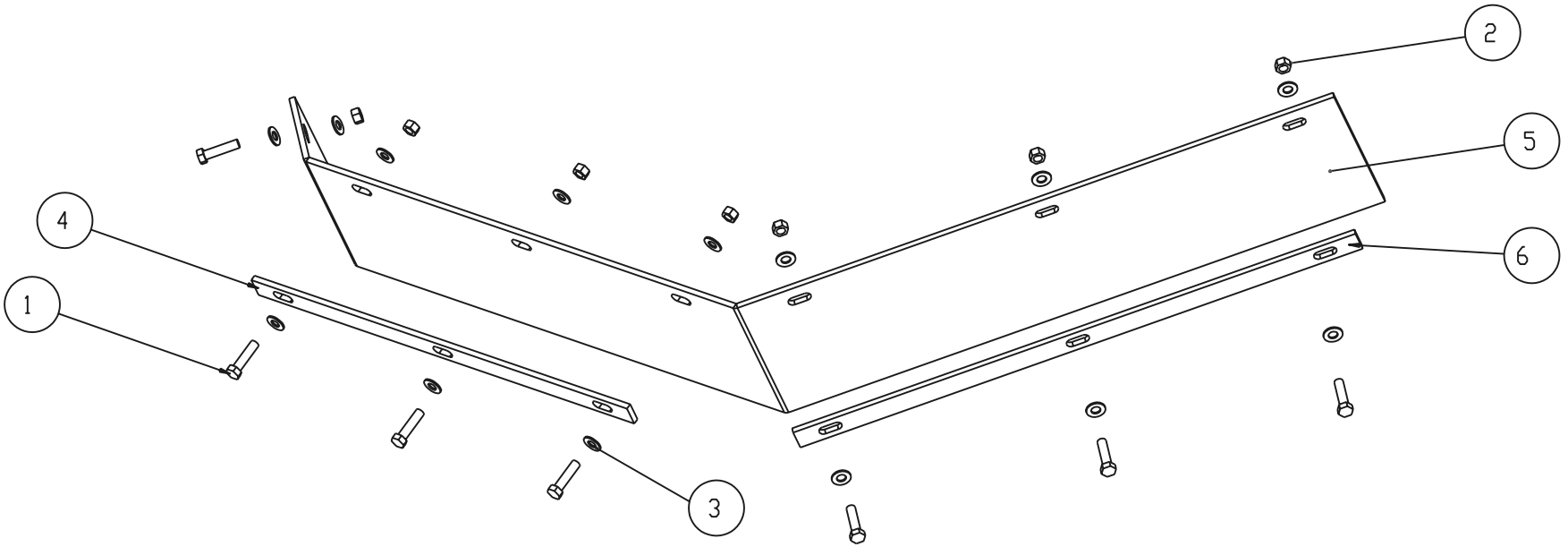

MODELED BY	J.O.C.	9/1/04
DRAWN BY	B.C	1/4/07
MATERIAL	R.M.N.	N/A

HARDEE
EVH MFG CO.
LORIS S.C.

DESCRIPTION: LR40148 / LR50148 Belting Extension Kit

SHEET 1 of 1

All Dimensions in Inches Unless Otherwise Specified
Dimensions in [ ] are in Millimeters
Tolerance Unless Otherwise Specified
Fractional Dimensions ± 1/16" Angular Dimensions ± 1°
Decimal Dim. to Limits Shown All Holes to be +0 -1/32"

Manufactured by:
EVH MFG CO, LLC

DO NOT SCALE | A DWG SIZE | DWG. NO. 22770

Item	Part Number	Qty.	Description
1	10029	2	Hex Bolt 3/8 x 1-1/4 gr.5 plated
2	10031	7	Hex Bolt 3/8 x 1 gr.5 plated
3	10175	9	3/8" Locknut (Gr.5 Plated)
4	10202	18	3/8" Flatwasher (Plated)
5	10317	54	5 Link Chain
6	10332	4	Cable Clamp
7	20981	1	Straight Chain Guard Weldment
8	20983	1	Corner Chain Guard Weldment
9	20986	1	Chain Guard Cable
10	20776	1	Chain Guard Weldment
11	20969	1	Chain Guard Cable

DWG. NO.	20775		REV. A
REV	CHANGE	BY	DATE	ECN
IR	INITIAL RELEASE	K.N.	6/30/08	---
A	CHAIN SLOTS/HOLES ARE NOW SINGLE CUT	T.B.B.	10/8/14	1587

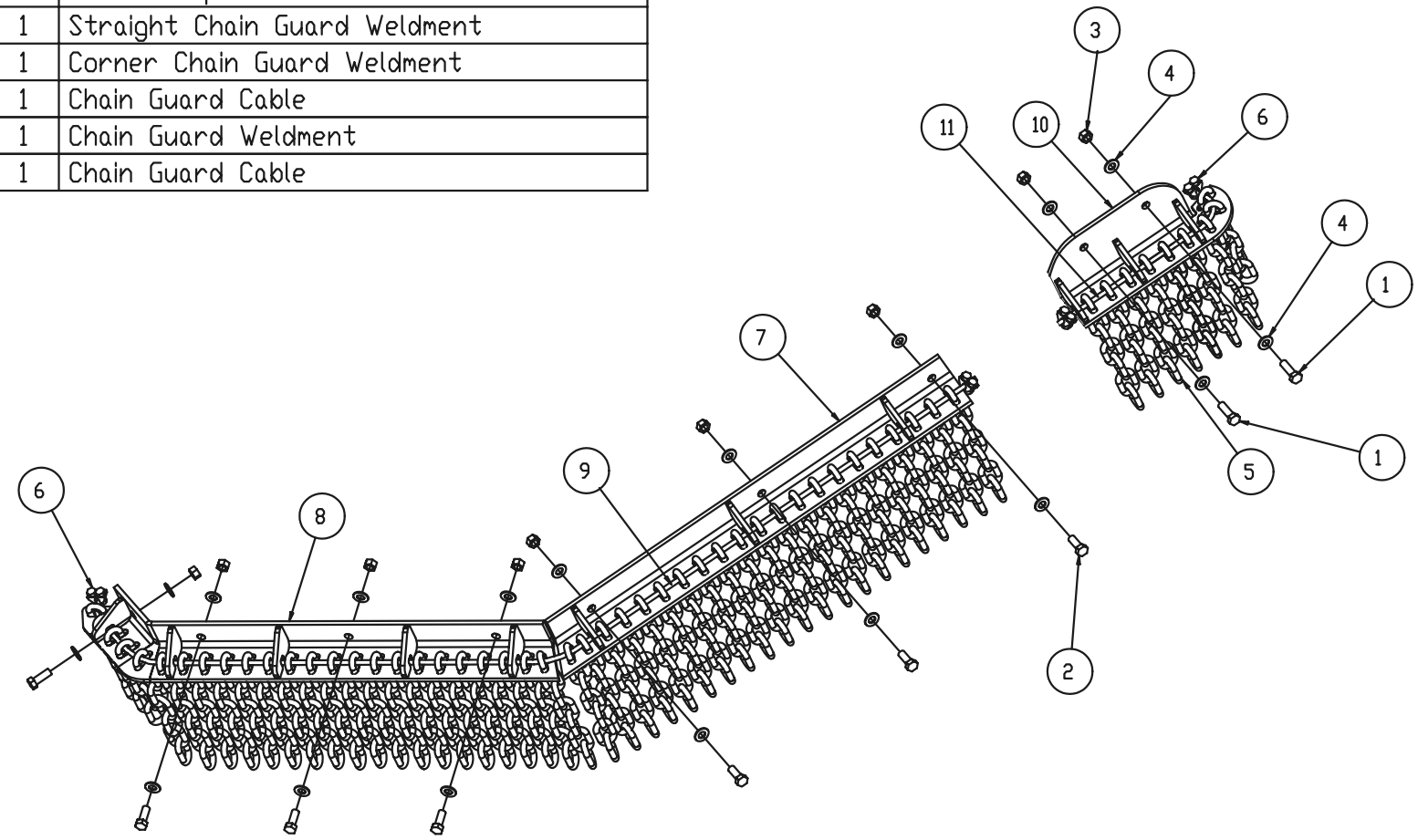

MODELED BY			HARDEE EVH MFG CO. LORIS S.C.
DRAWN BY	K.N.	6/30/08	
MATERIAL	R.M.N. N/A		DESCRIPTION: LR40148 / LR50148 Front Chain Guard Complete
			SHEET 1 of 1

All Dimensions in Inches Unless Otherwise Specified
Dimensions in [ ] are in Millimeters
Tolerance Unless Otherwise Specified
Fractional Dimensions ± 1/16"
Decimal Dim. to Limits Shown
Angular Dimensions ± 1°
All Holes to be +0 -1/32"

DO NOT SCALE | A DWG SIZE | DWG. NO. 20775

Item	Part Number	Qty.	Description
1	10031	7	Hex Bolt 3/8 x 1 gr.5 plated
2	10175	7	3/8" Locknut (Gr.5 Plated)
3	10202	14	3/8" Flatwasher (Plated)
4	10317	48	5 Link Chain
5	10332	2	Cable Clamp
6	22693	1	Straight Chain Guard Weldment
7	22694	1	Corner Chain Guard Weldment
8	22695	1	Chain Guard Cable

DWG. NO. 22696			REV. A	
REV	CHANGE	BY	DATE	ECN
–	INITIAL RELEASE	C.K.N.	10/22/12	---
A	CHAIN SLOTS/HOLES ARE NOW SINGLE CUT	T.B.B.	10/8/14	1587

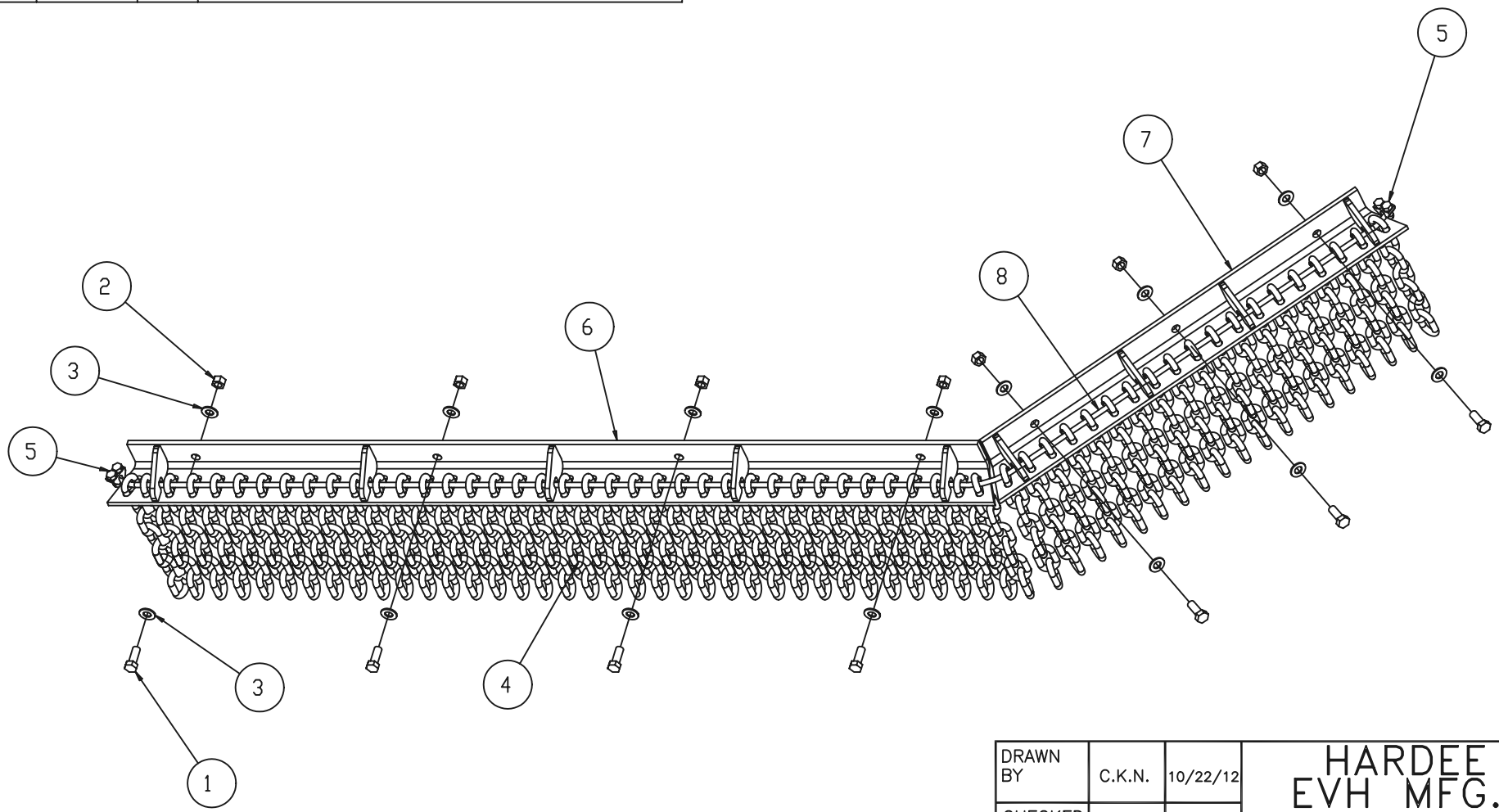

All Dimensions in Inches Unless Otherwise Specified
Dimensions in [ ] are in Millimeters

Tolerances Unless Otherwise Specified
Fractional Dimensions ±1/16" Angular Dimensions ±1°
Decimal Dim. to Limits Shown All holes to be $^{+0}_{-1/32}$

DRAWN BY	C.K.N.	10/22/12
CHECKED BY		
MATERIAL	R.M.N. N/A	
N/A		

HARDEE BY
EVH MFG. CO.
LORIS S.C.

APPLICATION	OLD PART #
----	----

DESCRIPTION
Rear Chain Guard - LR40148 / LR50148

DO NOT SCALE	A DWG SIZE	DWG. NO. 22696

Logo Decals

If the original decals applied to your mower at the factory become worn or damaged, you can order replacements by referencing the examples below.

You can order new decals from any local Hardee dealer.

OIL TANK

WEIGHT BOX

To apply the replacement decals:

- Clean the surface to place the new decal.
- Peel the decal away from the paper backing.
- Press firmly onto the clean surface.
- Squeeze out any air pockets using a straight edge.

11010 – Logo Decal, 4” x 13 1/2”

16339 – Model Number Decal

11850 – Web Site Decal

Hose Guard / 1st Stage Boom

11032 – logo Decal, 2 ¼ “ x 8 1/8”

10601 Driveshaft

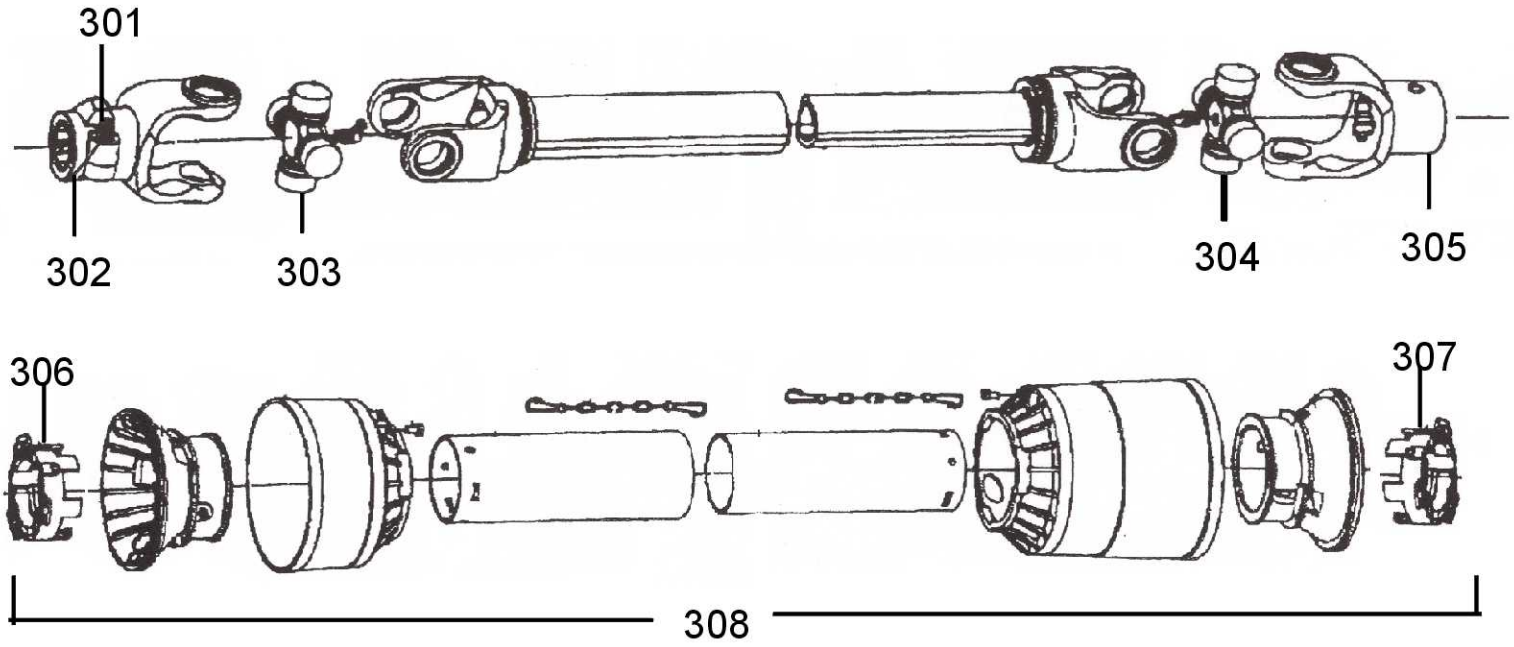

Key #	Part No.	Description	Key #	Part No.	Description
301	15579	Push pin complete	305	11443	Yoke, Imp end
302	11441	Yoke, Tractor end	306	15804	Shield bearing
303	11200	Cross kit	307	15805	Shield bearing
304	11200	Cross kit	308	11448	Shield kit complete

11716 Driveshaft

(1 3/4 20spline tractor end & 1 3/8 21spline Imp. end)

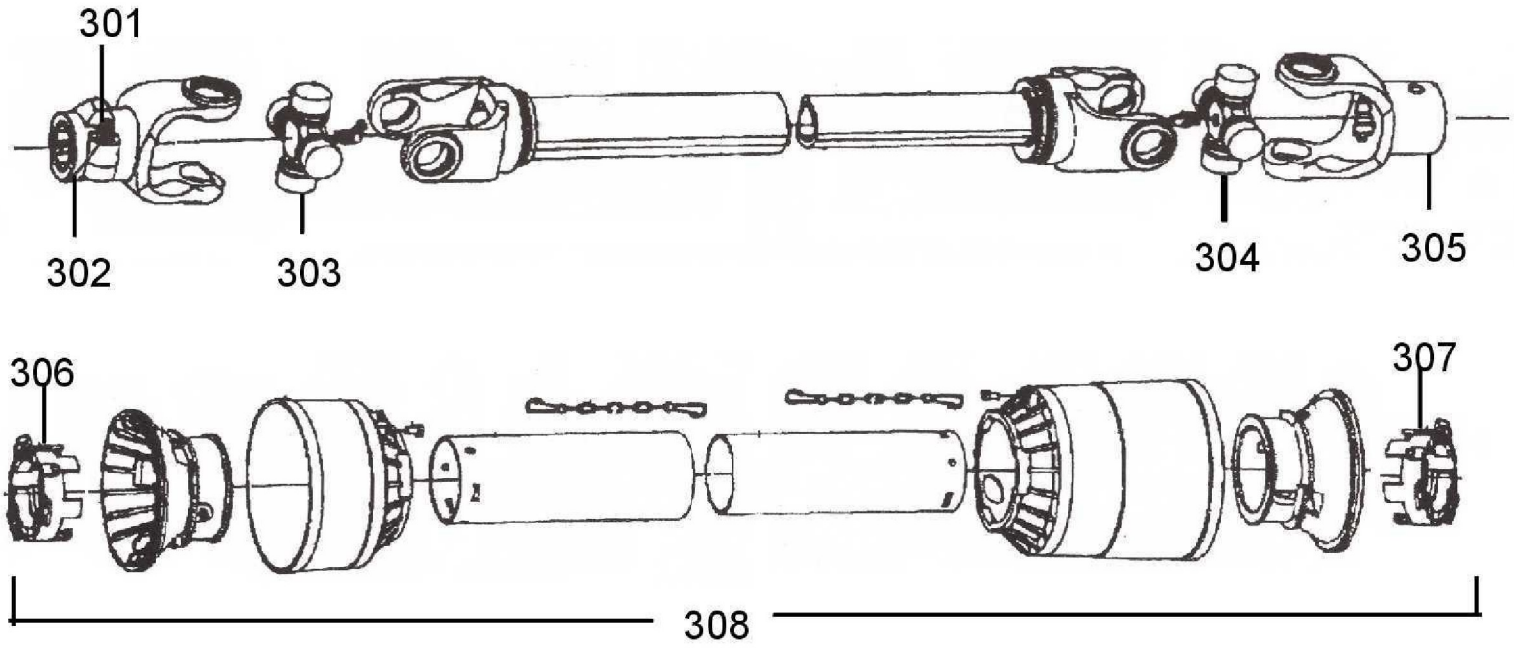

Key #	Part No.	Description	Key #	Part No.	Description
301	**15579**	Push pin complete	305	15807	1 3/8 21 spline yoke w/swell pin cat5
302	11855	1 3/4 20 spline yoke tractor end	306	15809	Shield bearing
303	15629	Cross kit	307	15810	Shield bearing
304	15629	Cross kit	308	15811	Shield kit complete

11717 Driveshaft

(1 3/8 21 spline yoke both ends)

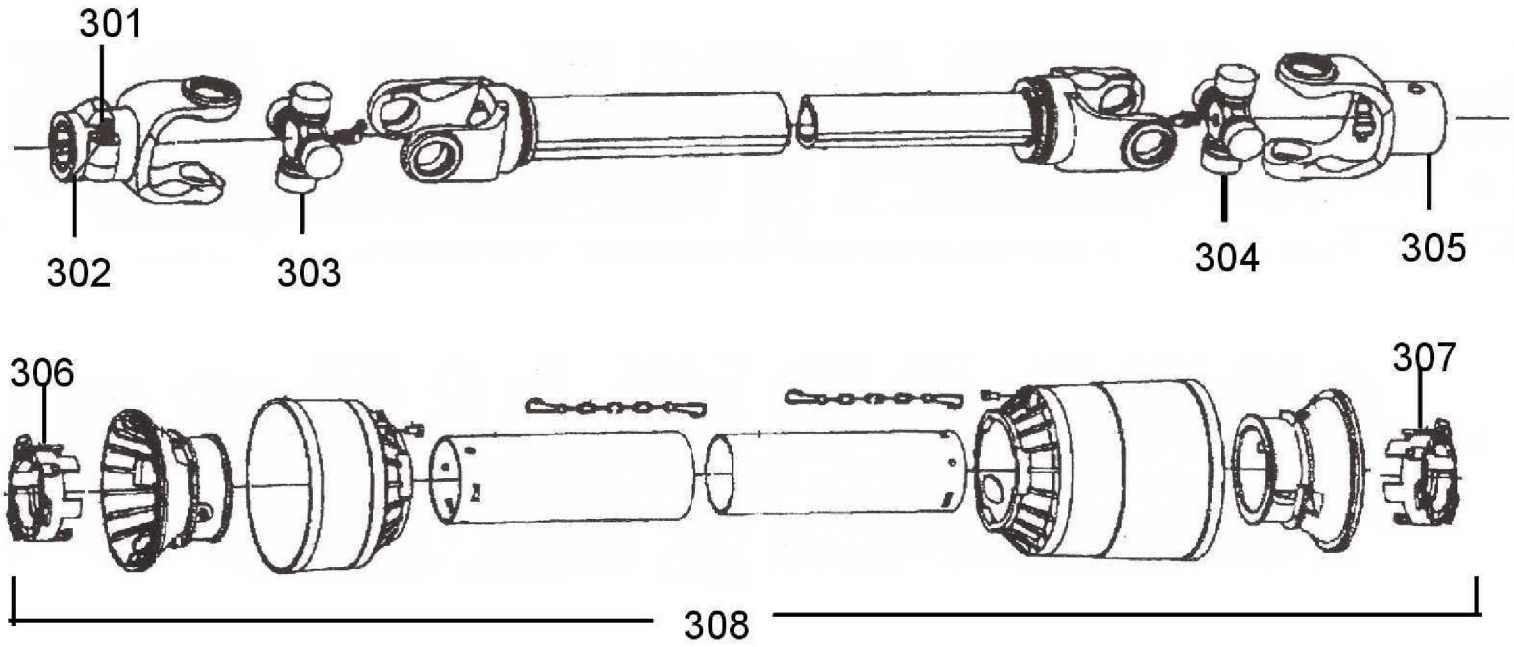

Key #	Part No.	Description	Key #	Part No.	Description
301	**15579**	Push pyn complete	305	15807	1 3/8 21 spline yoke w/swell pin cat3
302	10969	1 3/8 21 spline yoke tractor end	306	15804	Shield bearing
303	11200	Cross kit	307	15805	Shield bearing
304	11200	Cross kit	308	11448	Shield kit complete

Bolt Torque

Checking Bolt Torque

The tables shown below give correct torque values for various bolts and capscrews. Tighten all bolts to the torque specified in the chart unless otherwise noted. Check tightness of bolts periodically, using bolt torque chart as a guide. Replace hardware with the same strength bolt. Torque figures indicated are valid for non-greased or non-oiled threads and heads unless otherwise specified. Therefore, do not grease or oil bolts or cap screws unless otherwise specified in this manual. When using locking elements, increase torque values by 5%.

NOTE: Bolt Torques shown are maximum allowable values for ultimate safe working strength or external load-carrying capacity. The bolt torque are not applicable in cases where bolts are used as a pin-like device, holding together two or more movable objects and keeping them from spreading apart. – "Clamping Torque" Being dependent upon the application of the bolt. -

Torque value for bolts and cap screws are identified by their head markings.
See Page 2

Torque Specifications for Coarse Threads

Diameter "A"	Bolt Torque Coarse Thread SAE-2 LB-FT	SAE-2 N.m	SAE-5 LB-FT	SAE-5 N.m	SAE-8 LB-FT	SAE-8 N.m
1/4" - 20	6	8	9	12	12	17
5/16" - 18	10	13	19	25	27	36
3/8" - 16	20	27	33	45	45	63
7/16" - 14	30	41	53	72	75	100
1/2" - 13	45	61	80	110	115	155
9/16" - 12	70	95	115	155	165	220
5/8" - 11	95	128	160	215	220	305
3/4" - 10	165	225	290	390	400	540
7/8" - 9	170	230	420	570	650	880
1" - 8	225	345	630	850	970	1320
1 1/8" - 7	354	478	794	1072	1287	1737
1 1/4" - 7	500	675	1120	1512	1875	2531
1 3/8" - 6	655	884	1470	1985	2382	3216
1 1/2" - 6	870	1175	1950	2632	3161	4267

See page 2 for Torque Specifications for Fine Threads and Head Markings

Torque Specifications for Fine Threads

Diameter "A"	Bolt Torque Fine Thread					
	SAE-2		SAE-5		SAE-8	
	LB-FT	N.m	LB-FT	N.m	LB-FT	N.m
1/4" - 28	6	8	10	14	14	19
5/16" - 24	12	16	19	26	27	36
3/8" - 24	22	31	35	47	49	66
7/16" - 20	36	49	55	74	78	105
1/2" - 20	55	74	85	115	120	162
9/16" - 18	80	108	122	165	172	232
5/8" - 18	110	148	170	230	240	324
3/4" - 16	200	270	297	400	420	567
7/8" -14	180	243	474	640	668	402
1" - 12	274	370	705	952	995	1343
1" -14	280	378	721	973	1019	1376
1 1/8" - 12	397	536	890	1201	1444	1950
1 1/4" - 12	553	747	1241	1675	2012	2716
1 3/8" - 12	746	1007	1672	2257	2712	3661
1 1/2" - 12	979	1322	2194	2962	3557	4802

Head Markings

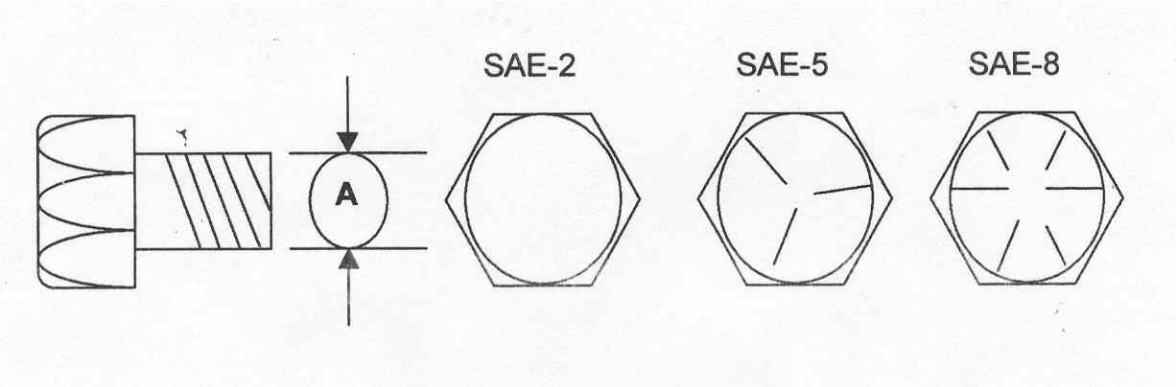

Hardee by EVH Manufacturing Co., LLC Hydraulic Mower Limited Warranty

Hardee by EVH Manufacturing Co., LLC warrants its **Hydraulic Mowers** for one year or **350 hours** (whichever comes first) to the **original** non-commercial, non-governmental, or non-municipal purchaser. For the **original** commercial, industrial, or municipal purchaser, the goods are warranted for 90 days or **350 hours** (whichever comes first) to be free from defects in material or workmanship.

This limited warranty does not apply to any part of the goods which have been subjected to improper or abnormal use, negligence, alteration, modification, accident, or damage due to lack of maintenance, wrong oil or lubricants, or which has served its normal life.

Hardee by EVH Manufacturing Co., LLC **Hydraulic Mowers** include the following units: Miti Mike-35, Tiger SS, DB4048, DB4060, EV1442, MR1442, LR40142, LR40148, LR50148, LR50160, HR2360, and CM2160 Mowers.

The Warranty Card **must** be filled out and returned within **30 days** of purchase. **No** warranty will be allowed without a properly completed and returned warranty card.

"Our obligation under this warranty shall be limited to repair or replacement of any part or parts of this implement, which, in our judgement, shows evidence of such defect, and provided further, that said parts shall be removed and returned by the owner at the owner's expense to Hardee by EVH Manufacturing Co., LLC, Loris, SC, through an authorized dealer, transportation prepaid, free and clear of liens or encumbrances."

This warranty shall not include normal wear items.

Changes or alterations to the implement made without the **written** authorization of the manufacturer will render this warranty void. **Tampering with or removing the factory installed hour meter will void this warranty.**

This warranty does not obligate this company to bear any labor costs in replacement of defective parts.

Hardee by EVH Manufacturing Co., LLC reserves the right to make changes or improvements in its equipment at any time, with the express understanding that such changes or improvements do not impose any obligation of the company to install such changes or improvements on implements previously manufactured.

Hardee by EVH Manufacturing Co., LLC Hydraulic Mowers are designed as **Agricultural** machines. They are designed to be used intermittently in **farm** use, **not** constantly as in "Commercial" use. Our machines are designed with brains instead of brawn, to fit the maximum number of tractors. They are not designed nor priced as Commercial machines that operate 8 hours a day / 5 days a week.

The CM2160 is the exception to the above statement, having been designed as a Commercial machine.

IMPLIED WARRANTIES: You may have some implied warranties. For example, you may have an implied warranty of merchantability (that the hydraulic mower is reasonably fit for the general purpose for which it was sold) or an implied warranty of fitness for a particular purpose (that the hydraulic mower is suitable for your special purposes). Special purposes must be specifically disclosed to Hardee by EVH Manufacturing Co., LLC, and not merely to the dealer before your purchase. Hardee by EVH Manufacturing Co., LLC itself must approve, in writing, that the special purpose is warrantable.

These implied warranties do not apply at all if you use your hydraulic mower for business or commercial use.

NOTES:

HARDEE BY EVH MFG CO

HARDEE BY EVH MFG. CO., LLC
4895 RED BLUFF ROAD LORIS, SC 29569
PHONE: 843-756-2555
www.hardeebyevh.com evhmfg@hardeebyevh.com