Item	Part Number	Qty.	Description
1	10072	10	HEX BOLT, 1/2 X 1 1/2 Gr.5 PLATED
2	10111	6	HEX BOLT, 3/4"-10 X 2" Gr.5 PLATED
3	10117	1	HEX BOLT 3/4" X 5" Gr.5 PLATED
4	10159	10	LOCKNUT W/NYLON INSERT(1/2" PLATED)
5	10166	20	LOCKNUT, 5/8"-11 PLATED
6	10168	7	LOCKNUT, 3/4"-10 Gr.5 PLATED
7	10184	10	LOCKWASHER, 1/2" PLATED
8	10204	10	FLATWASHER, 1/2" USS PLATED
9	10262	20	PLOW BOLT, 5/8" X 1-1/2 Gr.5 PLATED
10	10339	2	POP RIVET
11	10346	7	LYNCH PIN W/SNAP RING, CAT. 1 & 2
12	10434	2	96 CUTTING EDGE
13	10464	2	HITCH PIN, CATEGORY 1 & 11
14	10485	8	SCARIFIER
15	11032	1	DECAL, SMALL HARDEE LOGO
16	11131	2	DECAL, HARDEE BY EVH MFG (5 X 16)
17	11636	1	DECAL, LANDSCAPE & DISC HARROW KIT
18	11636-1	2	WARNING DECAL (KIT 11636)
19	11636-4	2	WARNING DECAL (KIT 11636)
20	11727	1	SERIAL NUMBER PLATE
21	11850	1	DECAL, WEB SITE
22	15852	2	RED REFLECTOR DECAL
23	15853	2	YELLOW REFLECTOR DECAL
24	16974	1	DECAL, QUICK HITCH READY
25	17070	2	DECAL, MODEL HP-96
26	40163	1	SCARIFIER LOCK
27	40167	2	A-FRAME BRACE, ASH QUICK HITCH
28	40168	1	BUSHING, ASH QUICK HITCH
29	40179	2	SCARIFIER LOCK WELDMENT
30	40309	1	ASH RIGHT A-FRAME - QUICK HITCH
31	40354	1	ASH LEFT A-FRAME - QUICK HITCH
32	40715	1	FRAME WELDMENT - HP-96 HARDEE PLANE
33	40724	2	SLIDE WELDMENT, HP-84 & HP-96

DWG. NO.	40705	REV. 1R	
REV	CHANGE	BY	DATE	ECN
1R	INITIAL RELEASE	M.J.Z.	8/28/25	1833

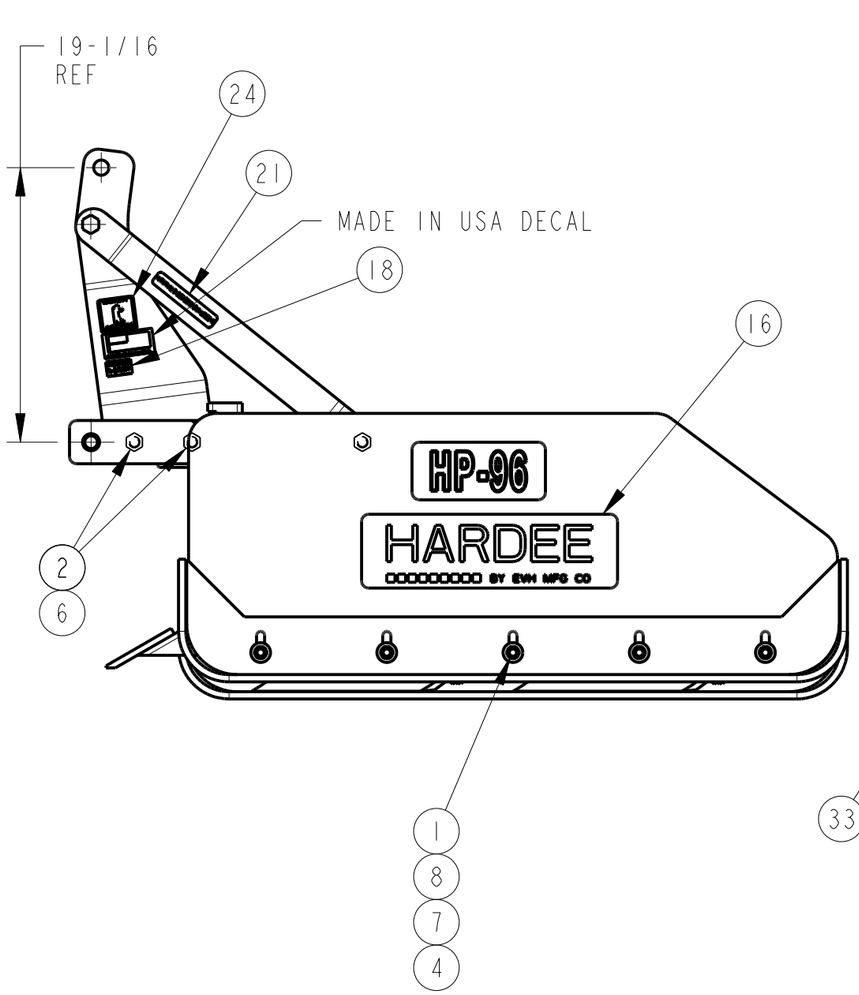

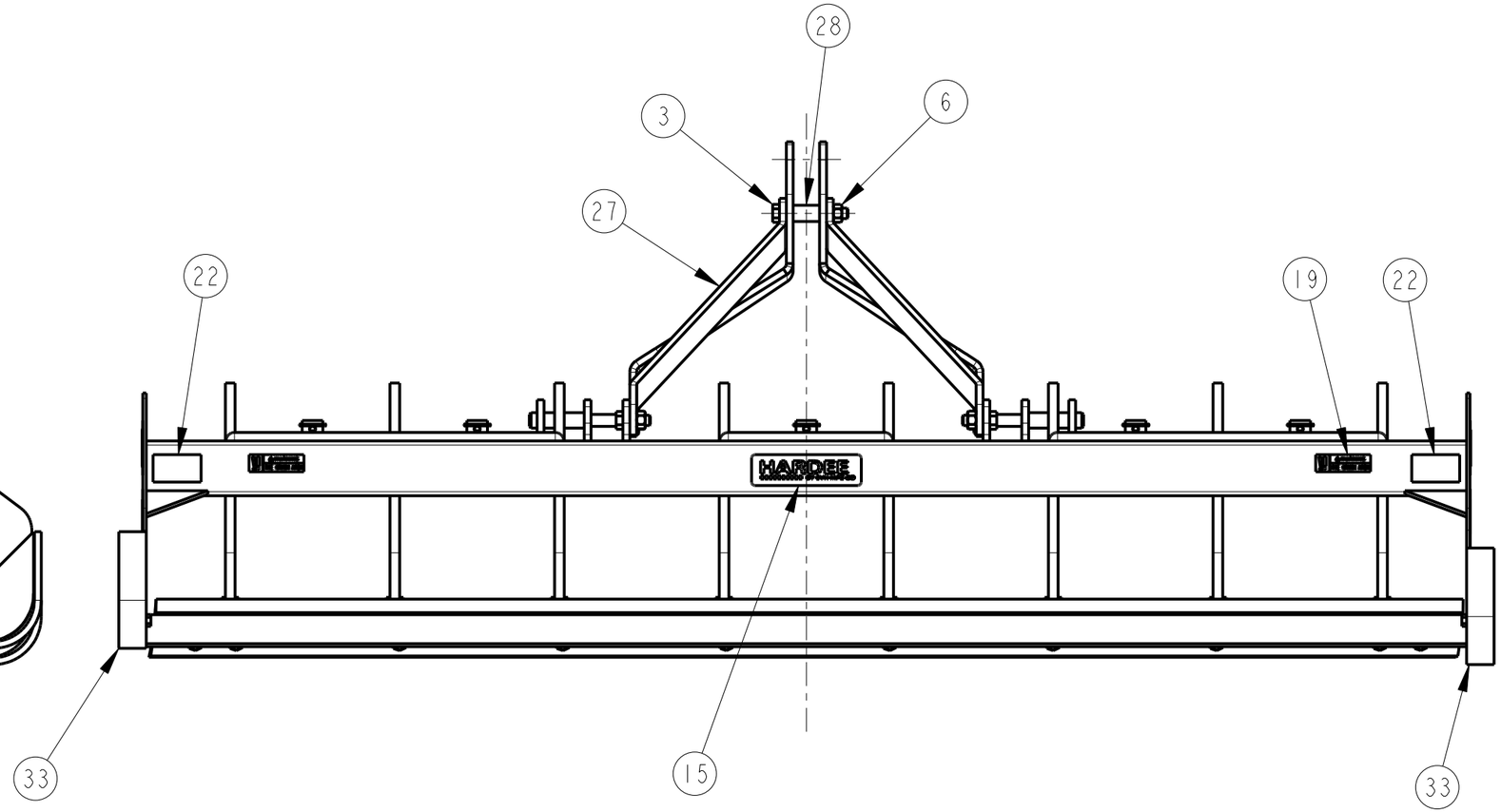

REAR VIEW

All Dimensions in Inches Unless Otherwise Specified
Dimensions in [ ] are in Millimeters
Tolerance Unless Otherwise Specified
Fractional Dimensions ± 1/16" Angular Dimensions ± 1°
Decimal Dim. to Limits Shown All Holes to be +0 -1/32"

MODELED BY	M.J.Z.	8/20/25
CHECKED BY	C.K.N.	8/22/25
MATERIAL	R.M.N.	
	N/A	

Manufactured By:
EVH Mfg. Co., LLC

HARDEE BY EVH MFG. CO.

LORIS S.C.

DESCRIPTION: HP-96 HARDEE PLANE

SHEET 1 of 2

DO NOT SCALE | B DWG SIZE | DWG. NO. 40705

DWG. NO.	40705		REV. IR	
REV	CHANGE	BY	DATE	ECN
IR	INITIAL RELEASE	M.J.Z.	8/28/25	1833

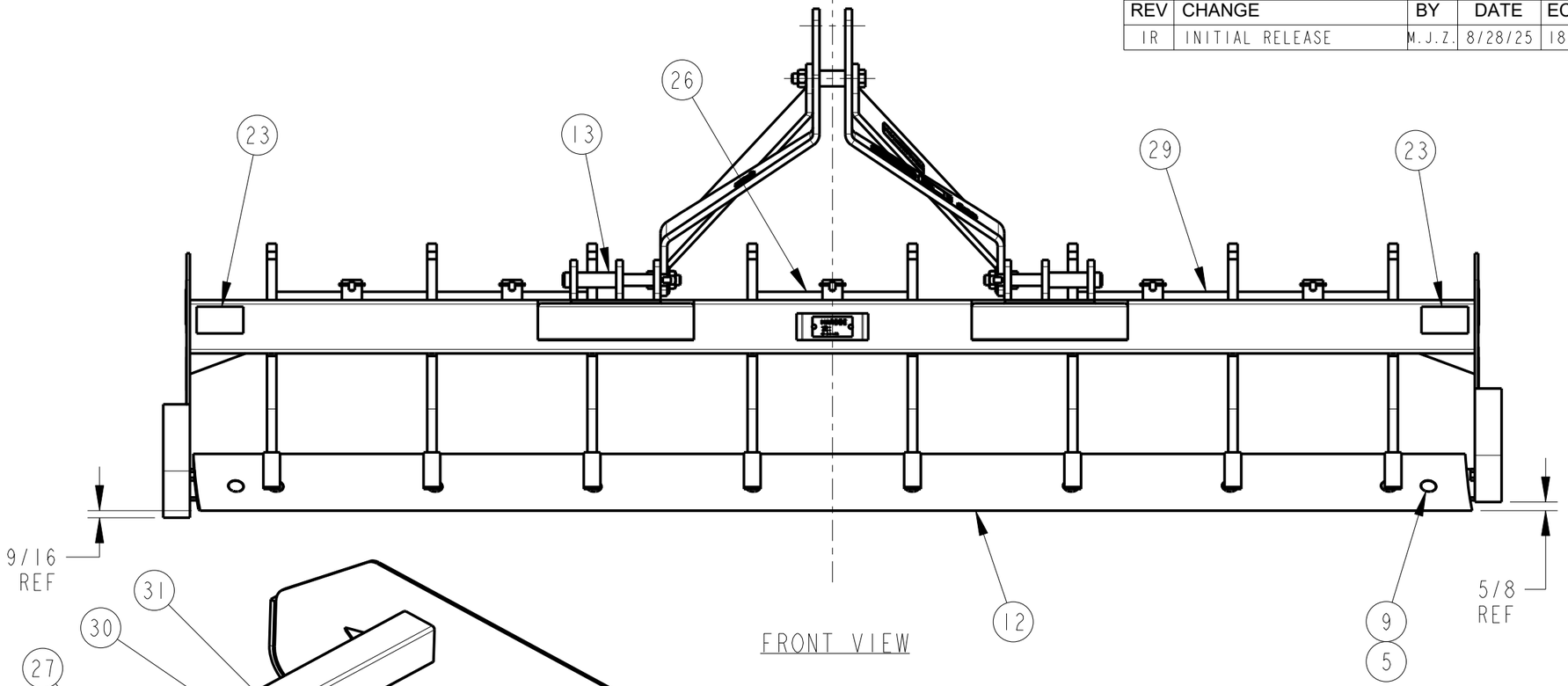

FRONT VIEW

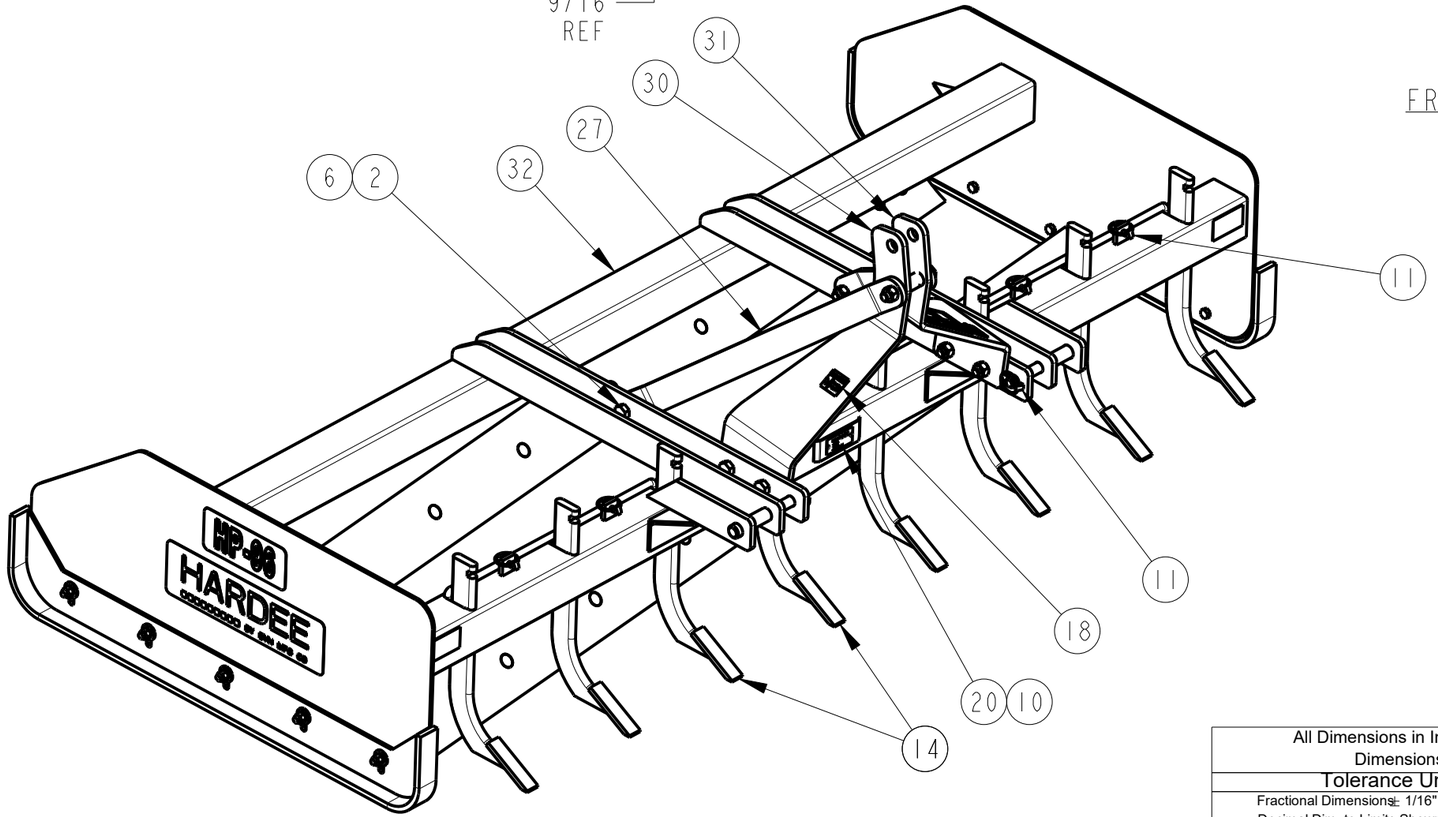

All Dimensions in Inches Unless Otherwise Specified
Dimensions in [ ] are in Millimeters
Tolerance Unless Otherwise Specified
Fractional Dimensions ± 1/16" Angular Dimensions ± 1°
Decimal Dim. to Limits Shown All Holes to be +0 -1/32"

MODELED BY	M.J.Z.	8/20/25
CHECKED BY	C.K.N.	8/22/25
MATERIAL	R.M.N.	
	N/A	

Manufactured By:
EVH Mfg. Co., LLC

HARDEE BY EVH MFG. CO.
LORIS S.C.

DESCRIPTION — SHEET 2 of 2

HP-96 HARDEE PLANE

DO NOT SCALE | B DWG SIZE | DWG. NO. 40705